TM 11-5895-482-20P

TECHNICAL MANUAL

ORGANIZATIONAL MAINTENANCE REPAIR PARTS AND SPECIAL TOOLS LISTS FOR COMMUNICATIONS CENTRAL AN/TSC-26 (NSN 5895-00-069-8777) RECEIVER GROUP OA-3984A/TSC-26 TRANSMITTER GROUP OA-3985A/TSC-26 (NSN 5820-00-869-6274) AND MESSAGE CENTER OA-3986A/TSC-26

HEADQUARTERS, DEPARTMENT OF THE ARMY
October 1979

TECHNICAL MANUAL
NO. 11-5895-482-20P

HEADQUARTERS
DEPARTMENT OF THE ARMY
WASHINGTON, DC 9 October 1979

ORGANIZATIONAL MAINTENANCE REPAIR PARTS AND SPECIAL TOOLS LISTS FOR COMMUNICATIONS CENTRAL AN/TSC-26 (NSN 5895-00-069-8777) RECEIVER GROUP OA-3984A/TSC-26 TRANSMITTER GROUP OA-3985A/TSC-26 (NSN 5820-00-869-6274) AND MESSAGE CENTER OA-3986A/TSC-26

Current as of 25 April 1979

REPORTING OF ERRORS

You can help improve this manual. If you **find any mistake or if you know of a way to improve the procedures, please Bet us know. Mail your letter, DA Form 2028 (Recommend Changes to Publication and Blank Forms), or DA** Form 2028-2 located in back **of this manual** direct to Commander, US Ar**my Communications and Electronics Materiel Readiness Command ATTN: DRSEL-ME-MQ, Fort Monmouth, NJ 07703.**

In either case, a reply will be furnished direct to you.

Table Of Contents

*This manual supersedes TM 11-5895-482-20P, 13 August 1973.

SECTION I

INTRODUCTION

1. Scope

This manual lists spares and repair parts; special tools; special test, measurement, and diagnostic equipment (TMDE), and other special support equipment required for performance of organizational maintenance of the AN/TSC-26, OA-3964A/TSC-26, OA-3985A/TSC-26, and OA-3986A/TSC-26. It authorizes the requisitioning and issue of spares and repair parts as indicated by the source and maintenance codes.

2. General

This Repair Parts and Special Tools List is divided into the following sections:

a. Section II. Repair Parts List A list of spares and repair parts authorized for use in the performance of maintenance. The list also includes parts which must be removed for replacement of the authorized parts. Parts lists are composed of functional groups in numeric sequence, with the parts in each group listed in figure and item number sequence.

b. Section ***III. Special Tools List*** Not applicable.

c. Section IV. National Stock Number and Part Number Index. A list, in National item identification number (NIIN) sequence, of all National stock numbers (NSN) appearing in the listings, followed by a list, in alphameric sequence, of all part numbers appearing in the listings. National stock numbers and part numbers are cross-referenced to each illustration figure and item number appearance.

a. **Explanation** of Columns

a. Illustration This column is divided as follows:

(1) Figure ***number.*** Indicates the figure number of the illustration on which the items is shown.

(2) ***Item number. The*** number used to identify item called out in the illustration.

b. Source, Maintenance, and Recoverability (SMR) Codes.

(1) *Source code.* Source codes indicate the manner of acquiring support items for maintenance, repair, or overhaul of end items. Source codes are entered in the first and second positions of the Uniform SMR Code format as follows:

Code	*Definition*
PA—	**Item procured and stocked for anticipated or known usage.**
XD-A	support item. that is not stocked. When required, item will be procured through normal supply channels.

NOTE

Cannibalization or salvage may be used as a source of supply for any items source coded above except those coded XA and aircraft support items as restricted by AR 700-42

(2) Maintenance code. Maintenance codes are assigned to indicate the levels of maintenance authorized to USE and REPAIR support items. The maintenance codes are entered in the third and fourth positions of the Uniform SMR Code format as follows:

(a) The maintenance code entered in the third position will indicate the lowest maintenance level authorized to remove, replace, and use the support item. The maintenance code entered in the third position will indicate one of the following levels of maintenance:

Code	*Application/Explanation*
O-	Support item is removed, replaced, used at the organizational level.

(b) The maintenance code entered in the fourth position indicates whether the item is to be repaired and identifies the lowest maintenance level with the capability to perform complete repair (i.e., all authorized maintenance functions). This position will contain one of the following maintenance codes:

Code	*Application/Explanation*
F-	The lowest maintenance level capable of complete repair of the support item is the direct support level.
D-	The lowest maintenance level capable of complete repair of the support item is the depot level.
Z—	**Nonreparable. No repair is authorized.**

(3) *Recoverability code* Recoverability codes are assigned to support items to indicate the disposition action on unserviceable items. The recoverability code is entered in the fifth position of the Uniform SMR Code format as follows:

Recoverability codes	*Definition*
Z—	Nonreparable item. When unserviceable, condemn and dispose at the level indicated in position 3.

Recoverability codes	*Definition*
F	Reparable item. When uneconomically reparable, condemn and dispose at the direct support level.
D	Reparable item. When beyond lower level repair capability, return to depot. Condemnation and disposal not authorized below depot level.

c. National Stock Number. Indicates the National stock number assigned to the item and will be used for requisitioning purposes.

d. Part Number. Indicates the primary number used by the manufacturer (individual, company, firm. corporation, or Government activity), which controls the design and characteristics of the item by means of its engineering drawings, specifications, standards, and inspection requirements to identify an item or range of items.

NOTE

When a stock numbered item is requisitioned, the repair part received may have a different part number than the part being replaced.

e. Federal Supply Code for Manufacturer (FSCM). The FSCM is a 5-digit numeric code listed in SB 708-42 which is used to identify the manufacturer, distributor, or Government agency, etc.

f Description. Indicates the Federal item name and, if required, a minimum description to identify the item.

g. Unit of *Measure (U/M).* Indicates the standard of the basic quantity of the listed item as used in performing the actual maintenance function. This measure is expressed by a two-character alphabetical abbreviation (e.g., ea, in, pr, etc). When the unit of measure differs from the unit of issue, the lowest unit of issue that will satisfy the required units of measure will be requisitioned.

h. Quantity Incorporated in Unit. Indicates the quantity of the item used in the breakout shown o[redacted] the illustration figure, which is prepared for a fun[redacted] tional group, subfunctional group, or an assembly.

4. Special Information

The following publication pertains to th[redacted] AN/TSC-26 and its components:

TM 11-5895-482-12, Communications Central AN/TSC-26

5. How to Locater Repair Parts

a. When National stock number or part number is unknown.

(1) First. Using the table of contents, determine the functional group within which the item belongs This is necessary since illustrations are prepared for functional groups and listings are divided into the same groups.

(2) Second Find the illustration covering the functional group to which the item belongs.

(3) Third Identify the item on the illustration and note the illustration figure and item number or the item.

(4) *Fourth.* Using the Repair Parts Listing, find the figure and item number noted on the illustration.

b. When National stock number or part number is known.

(1) *First.* Using the Index of National Stock Numbers and Part Numbers, find the pertinent National stock number or part number. This index is in NIIN sequence followed by a list of part numbers in alphameric sequence, cross-referenced to the illustration figure number and item number.

(2) *Second* After finding the figure and item number, locate the figure and item number in the repair parts list.

6. Abbreviations.

Not applicable.

(Next printed page is 4)

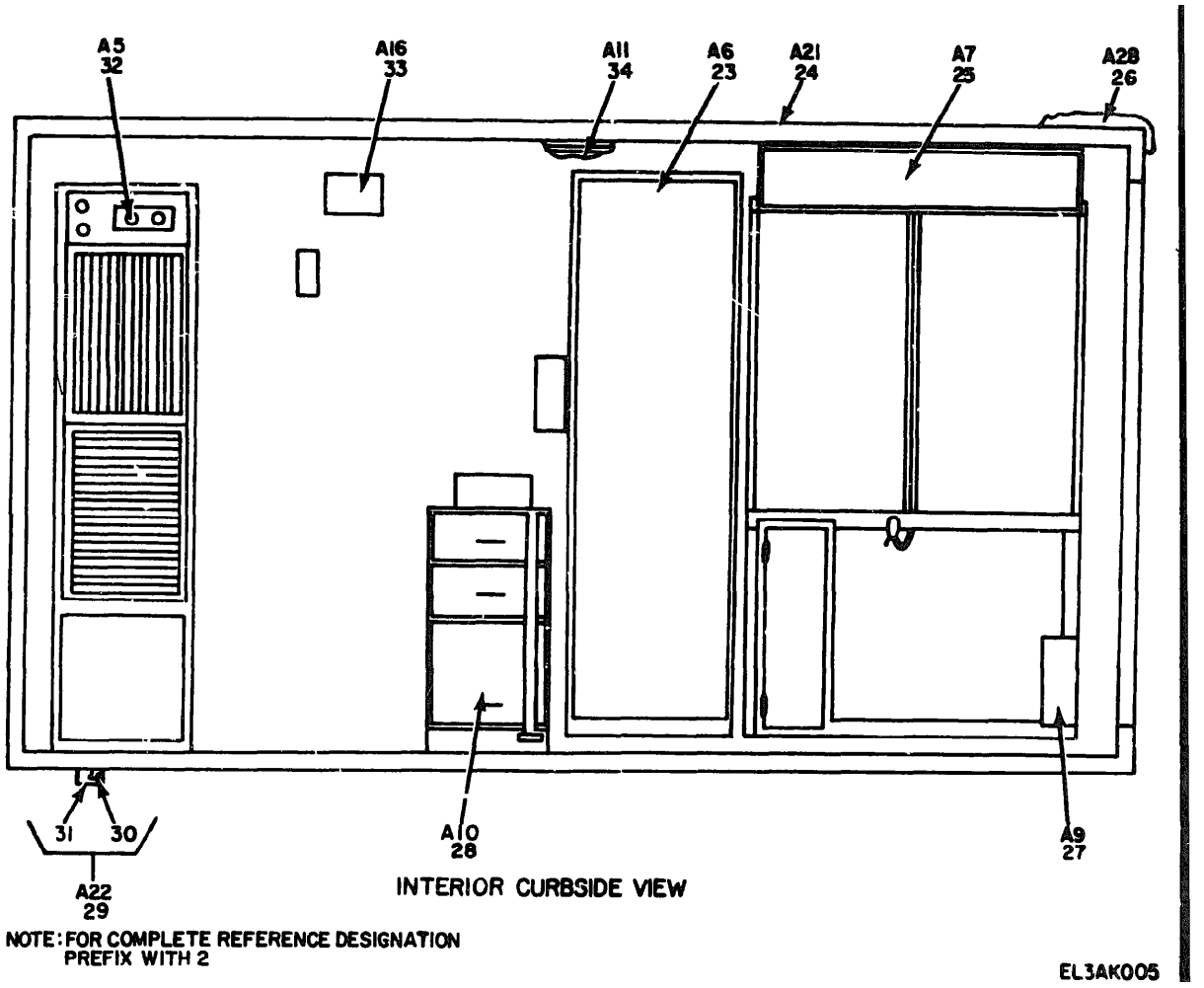

Figure 1 Receiver Group OA-3984/T^SC-26(2)

(1) ILLUSTRATION (a) FIG. NO.	(b) ITEM NO.	(2) SMR CODE	(3) NATIONAL STOCK NUMBER	(4) PART NUMBER	(5) FSCM	(6) DESCRIPTION USABLE ON CODE	(7) U/M	(8) QTY INC IN UNIT
						Group 01 RECEIVER GROUP AO-39844/TSC26(2)		
1	28	XDOFD		SML537957-1	97983	CABINET.....	EA	1

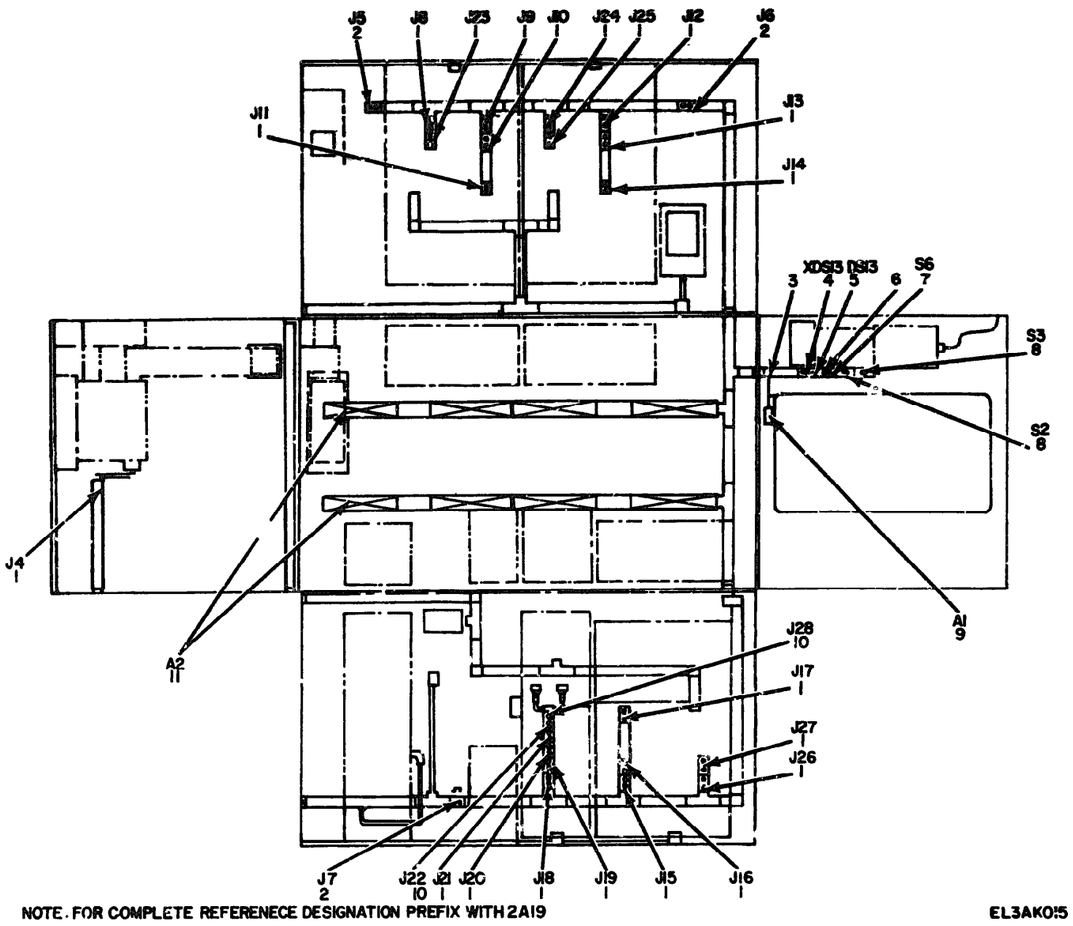

Figure 2 Receiver *Group OA-3984/tsc-26(2), Raceway installation*

(1) ILLUSTRATION (a) FIG. NO.	(1) ILLUSTRATION (b) ITEM NO.	(2) SMR CODE	(3) NATIONAL STOCK NUMBER	(4) PART NUMBER	(5) FSCM	(6) DESCRIPTION USABLE ON CODE	(7) U/M	(8) QTY INCORP IN UNIT
2	3	PAUZZ	6240-00-129-18916	NE30	01349	LAMP,GLOW	EA	1

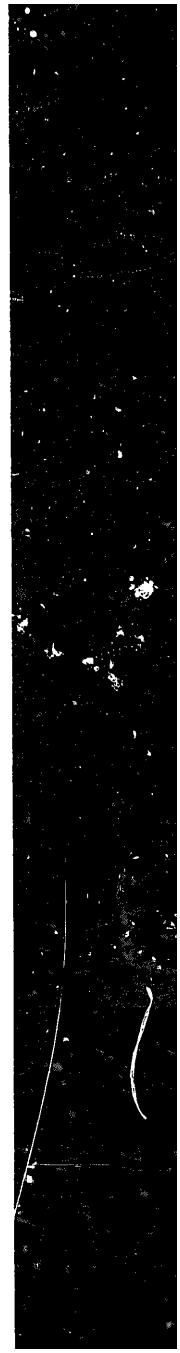

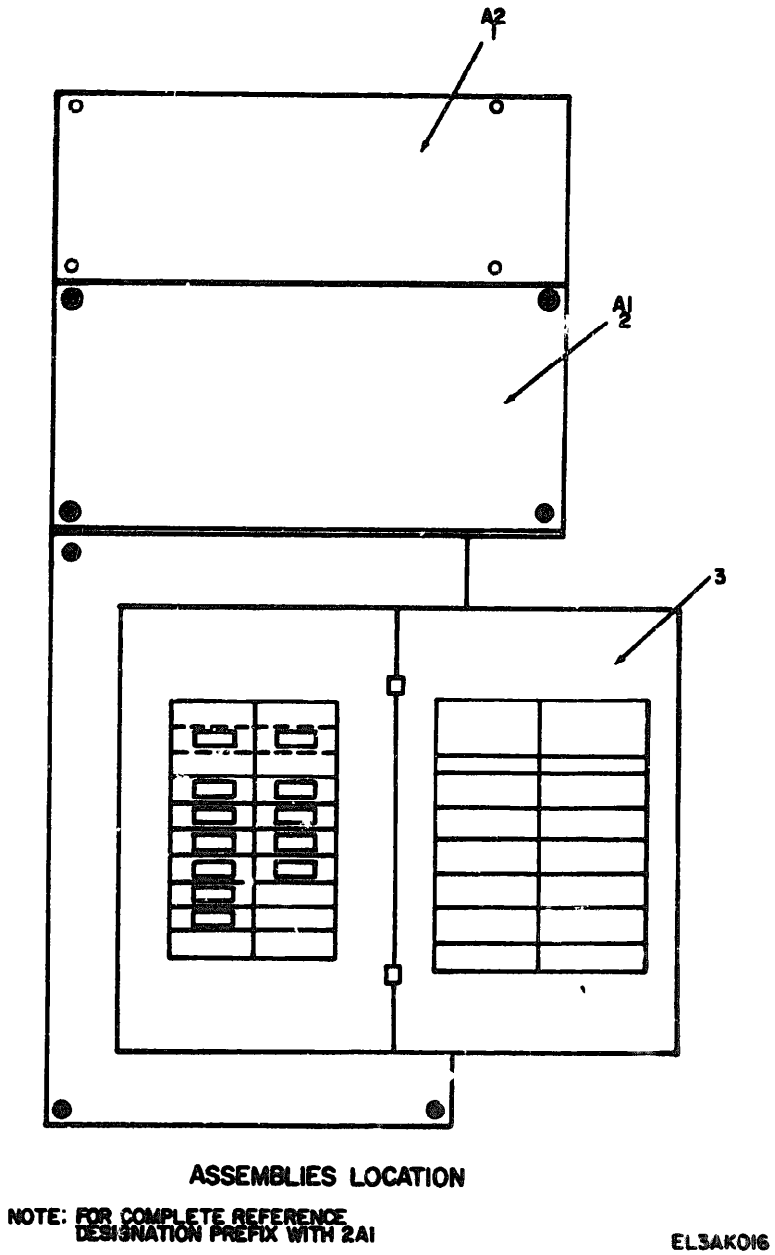

Figure 3. Distribution Box (2A1)

(1) ILLUSTRATION (a) FIG. NO.	(b) ITEM NO.	(2) SMR CODE	(3) NATIONAL STOCK NUMBER	(4) PART NUMBER	(5) FSCM	(6) DESCRIPTION USABLE ON CODE	(7) U/M	(8) QTY INC IN UNIT
						GROUP 0101 DISTRIBUTION BOX (2A1)		
3	1	PAUFD	6110-00-112-8796	SMD534443-1	97983	PROTECTOR,PLATE	EA	1
3	2	XBOFB		SMD537962-1	97983	PANEL,INDICATOR	EA	1

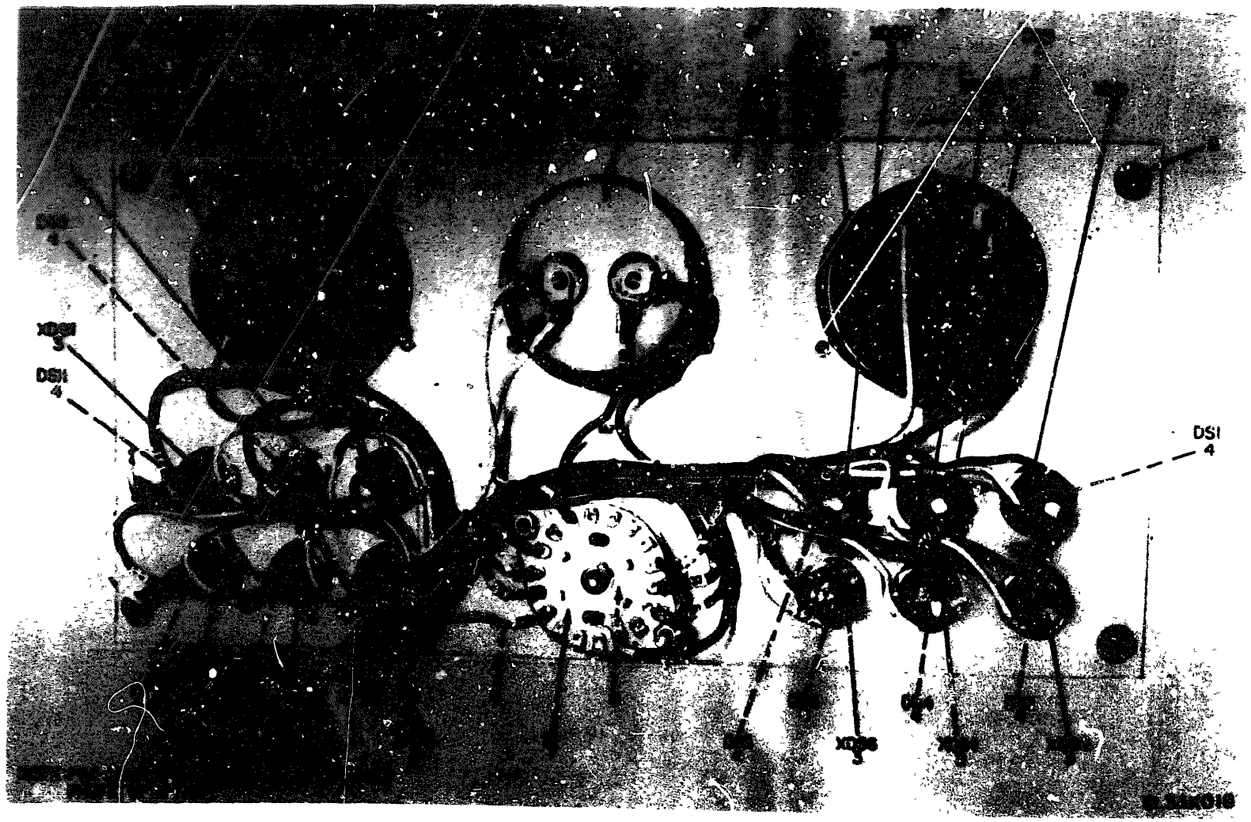

Figure 4. Panel Indicator (2A1A1).

(1) ILLUSTRATION (a) FIG. NO.	(1) ILLUSTRATION (b) ITEM NO.	(2) SMR CODE	(3) NATIONAL STOCK NUMBER	(4) PART NUMBER	(5) FSCM	(6) DESCRIPTION USABLE ON CODE	(7) U/M	(8) QTY INC IN UNIT
						GROUP 010101 PANEL INDICATION (2A1A1)		
[illegible]	[illegible]	[illegible]	4240-00-223-9402	[illegible]	[illegible]	[illegible]	[illegible]	12

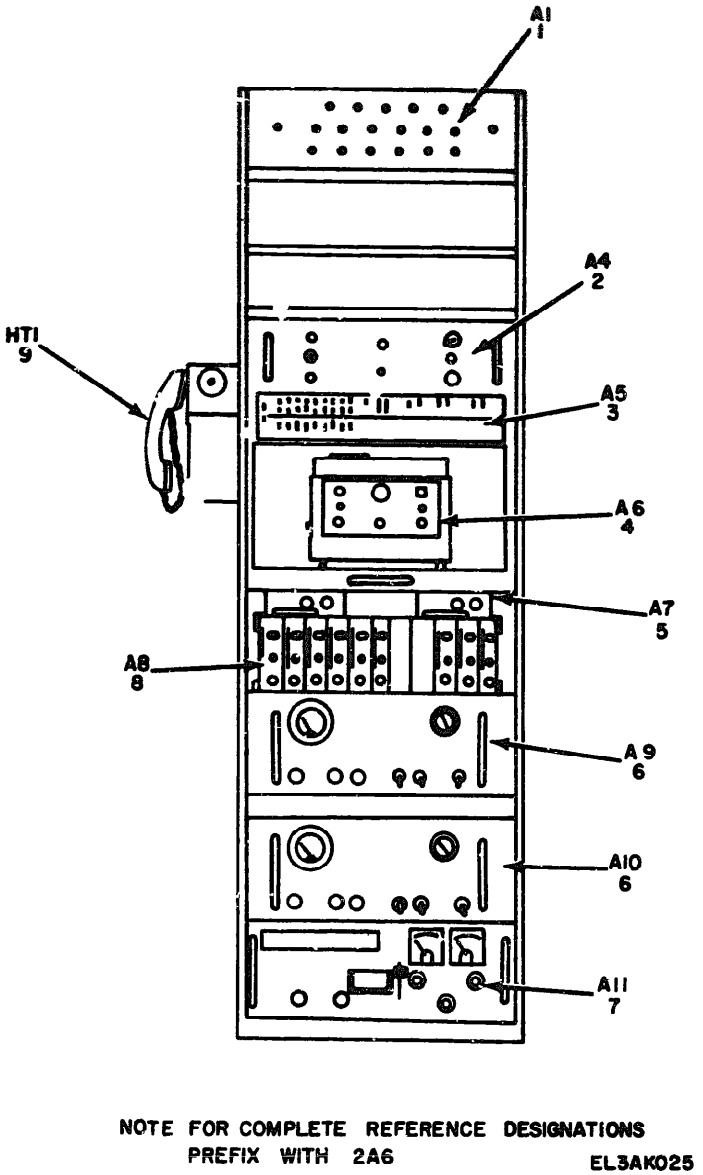

Figure 5 Patching Equipment (2A6).

(1) ILLUSTRATION (a) FIG. NO.	(1) ILLUSTRATION (b) ITEM NO.	(2) SMR CODE	(3) NATIONAL STOCK NUMBER	(4) PART NUMBER	(5) FSCM	(6) DESCRIPTION USABLE ON CODE	(7) UM	(8) QTY INC IN UNIT
						GROUP 0105 PATCHING EQUIPMENT (2A6)		
5	4	XB022		5454A25	22003	REPRODUCER, SOUND	EA	1
5	5	XB022		KF-13	97963	TELEPHONE	EA	1

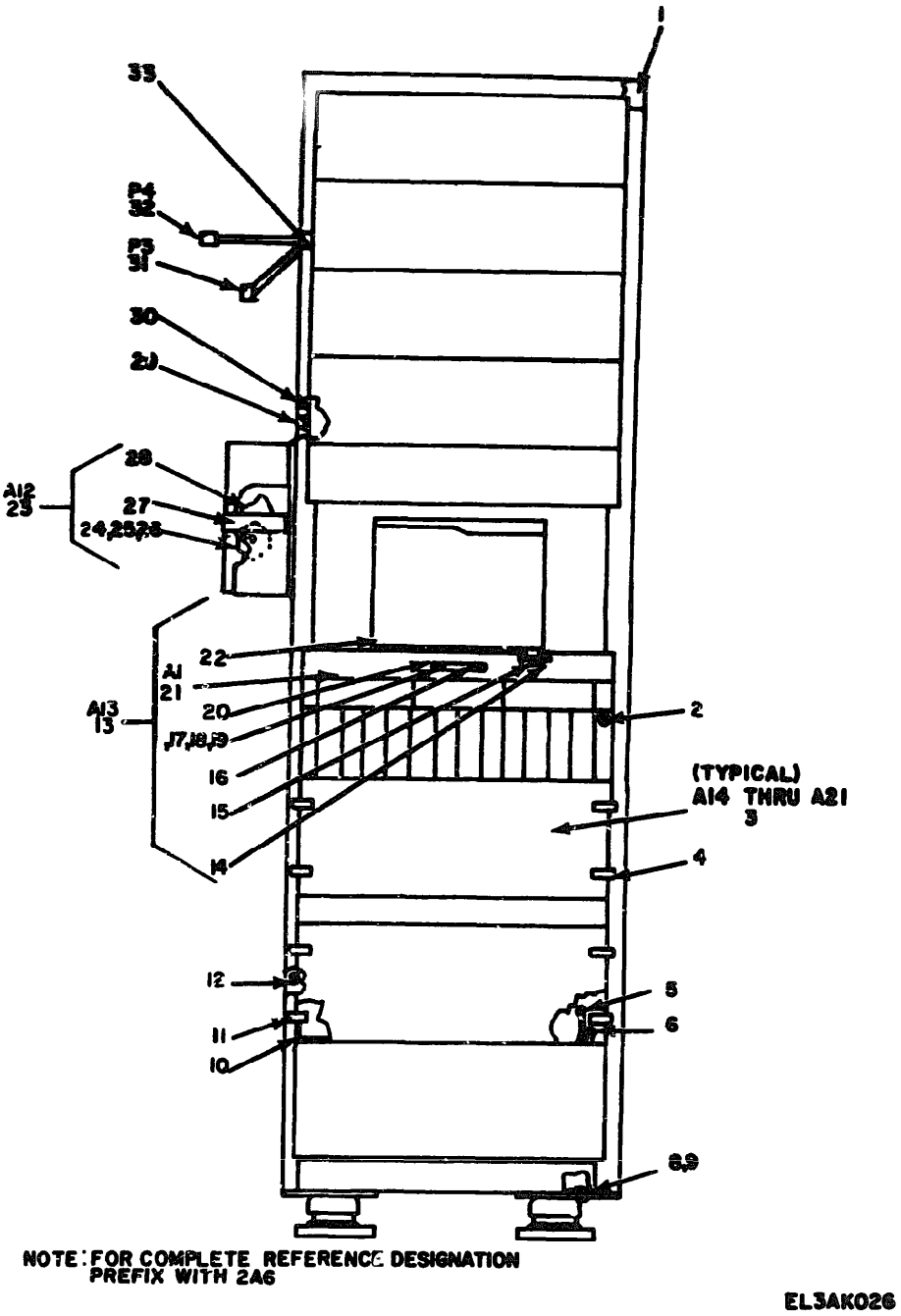

Figure 6. Patching Equipment (2A6), Front View

(1) ILLUSTRATION (a) FIG. NO.	(1) ILLUSTRATION (b) ITEM NO.	(2) SMR CODE	(3) NATIONAL STOCK NUMBER	(4) PART NUMBER	(5) FSCM	(6) DESCRIPTION USABLE ON CODE	(7) UOM	(8) QTY INC IN UNIT
a	[illegible]	XB022		MS35347-62	96906	SCREW,CAP,HEXAGON	EA	1
a	[illegible]	PAUUU	5310-00-595-8057	MS15795-815	97403	WASHER,FLAT	EA	1
a	14	XB022		SMS30000-1	97403	SCREW,EXTERNALLY	EA	8

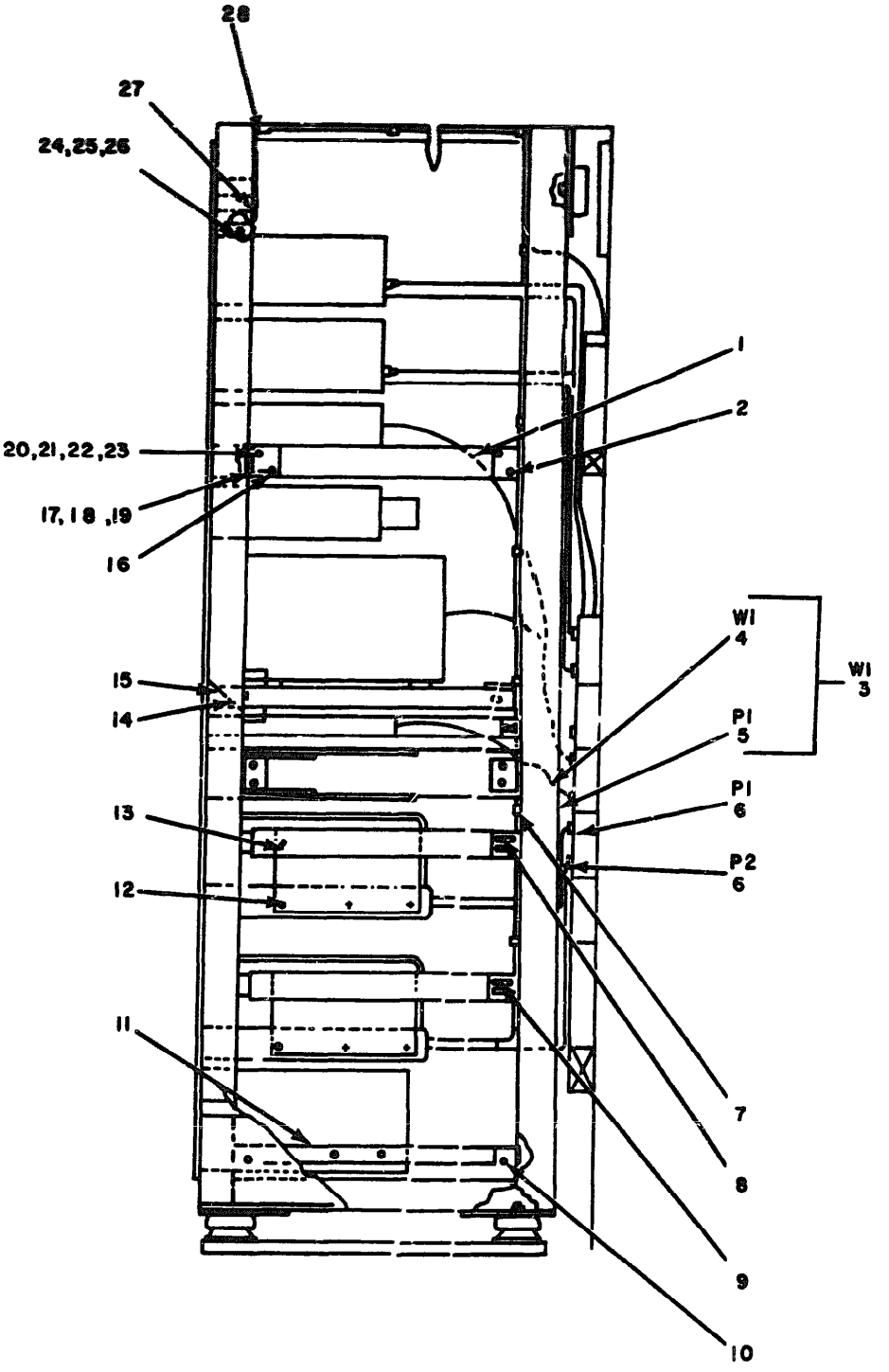

NOTE: FOR COMPLETE REFERENCE DESIGNATION PREFIX WITH 2A6

EL3AK027

Figure 7 Patching Equipment (2A6) Sideview

(1) ILLUSTRATION (a) FIG. NO.	(b) ITEM NO.	(2) SMR CODE	(3) NATIONAL STOCK NUMBER	(4) PART NUMBER	(5) FSCM	(6) DESCRIPTION USABLE ON CODE	(7) U/M	(8) QTY INC IN UNIT
1	3	XBOZZ		SMC538374-1	97403	SLEEVE	EA	2
1	4	XBOZZ		SMC538376-2	97403	SLEEVE	EA	2
1	15	XBOZZ		SMD536605-1	97403	WASHER,PLATE	EA	10
1	24	XPOZZ		MS35307-66	97903	SCREW,CAP,HEXAGON	EA	6
1	25	PAOZZ	5310-00-173-7618	MS15795-814	96906	WASHER,FLAT	EA	6
1	26	PAOZZ	5310-00-215-0586	MS35338-46	96906	WASHER	EA	7
1	27	XBOZZ		SMD537429-1	97403	HAGR	EA	1

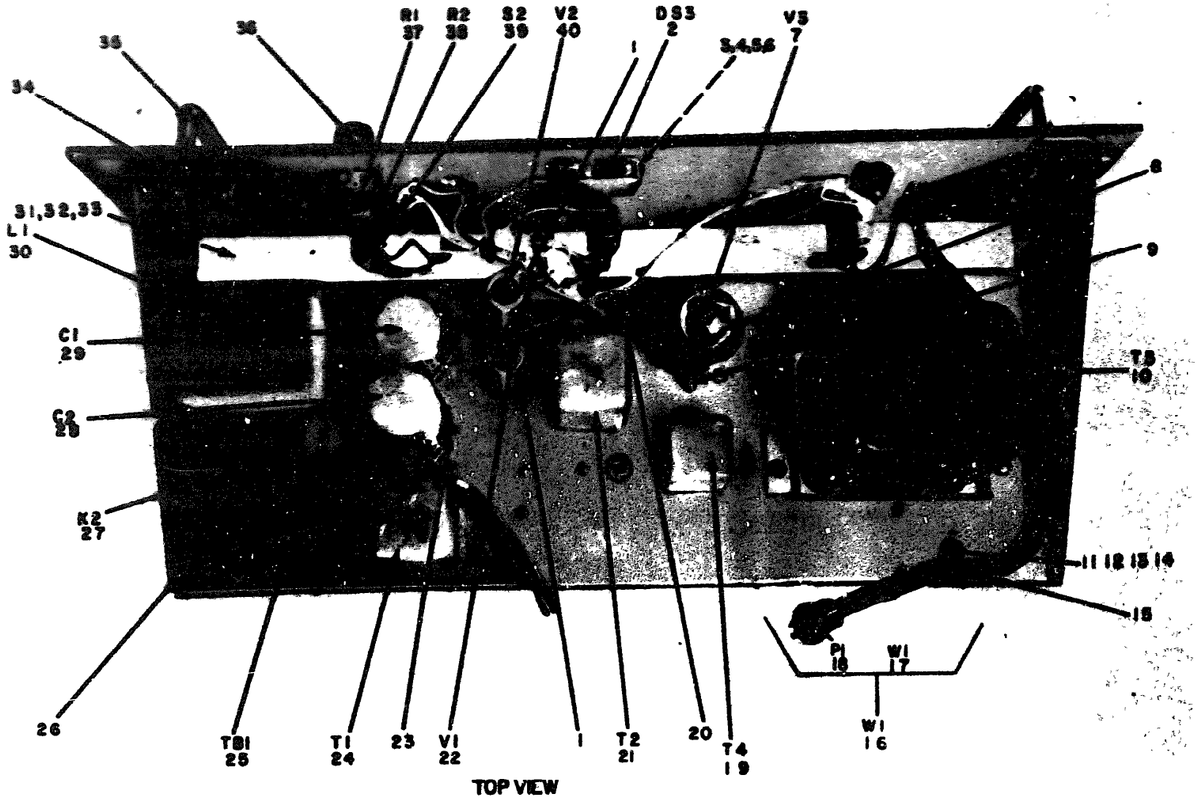

NOTE: FOR COMPLETE REFERENCE DESIGNATION PREFIX WITH 2A6A4

EL3AK029

Figure 8. Keyer, KY-576/TSC-26(2A6A4), Top View.

(1) ILLUSTRATION (a) FIG. NO.	(b) ITEM NO.	(2) SMR CODE	(3) NATIONAL STOCK NUMBER	(4) PART NUMBER	(5) FSCM	(6) DESCRIPTION USABLE ON CODE	(7) UOM	(8) QTY INC IN UNIT
						GROUP 010502 REYEY RY-576/TSC-20 (2A1A4)		
8	8	PAUZZ	5460-00-272-9182	8444A	01349	ELECTRON TUBE	EA	1
8	11	PAUZZ	5305-00-854-3585	MS35234-62	96906	SCREW,MACHINE	EA	2
8	12	PAUZZ	5310-00-619-1148	MS15795-308	96906	WASHER,FLAT	EA	2
8	13	PAUZZ	5310-00-059-1631	MS35338-41	96906	WASHER	EA	2
8	14	PAUZZ	5310-00-270-8810	MS35650-104	96906	WASHER	EA	2
8	15	PAUZZ	5340-00-954-31340	MS25281-8	96906	CLAMP,LOOP	EA	2
8	16	XBOZZ		SMC537426 1	97403	CABLE ASSY,PUBE	EA	1
8	17	XBOZZ		503-16	79916	CABLE,PUBE	EA	1
8	18	PAUZZ	5935-00-947-3276	4720	74545	CONNECTOR,PLUG,ELEC	EA	1
8	22	PAUZZ	5960-00-543-1720	6AQ5A	60131	ELECTRON TUBE	EA	1
8	44	PAUZZ	5960-00-108-0257	884	01349	ELECTRON TUBE	EA	1

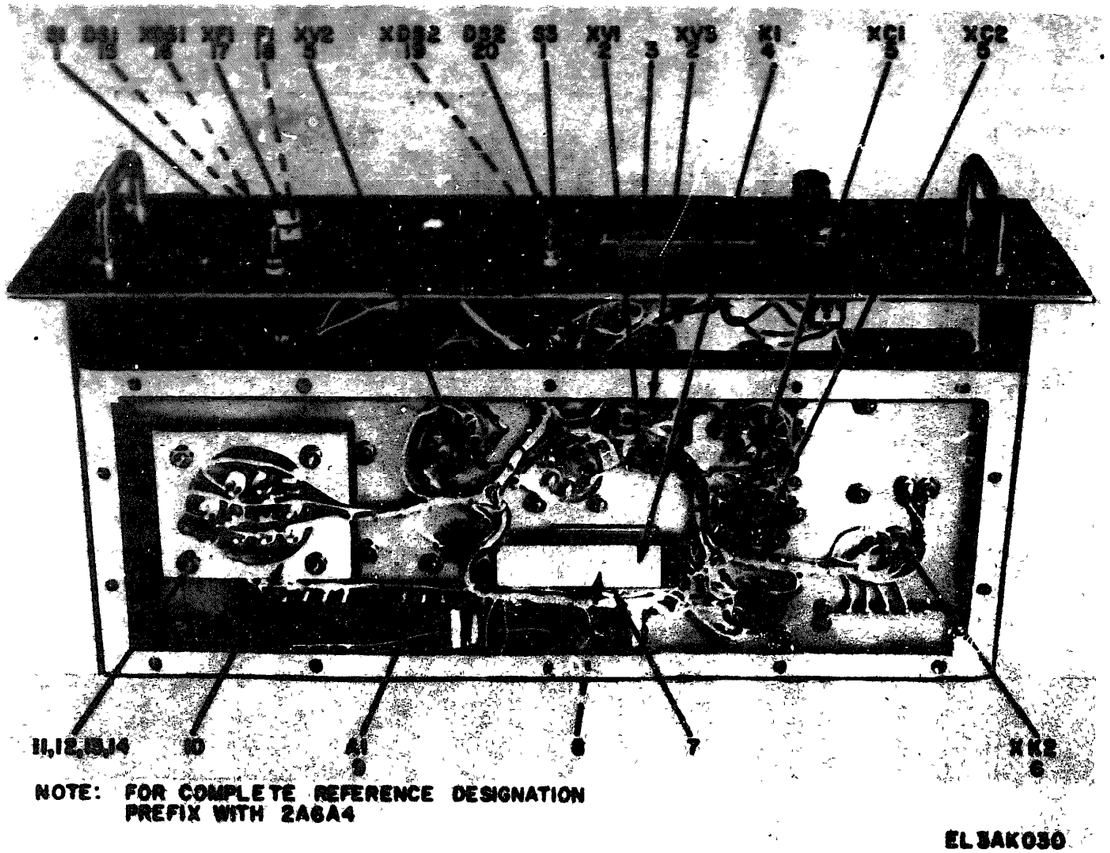

Figure 9. Keyer, KY-576/TSC-26(2A6A4), Bottom View

(1) ILLUSTRATION (a) FIG. NO.	(1) ILLUSTRATION (b) ITEM NO.	(2) SMR CODE	(3) NATIONAL STOCK NUMBER	(4) PART NUMBER	(5) FSCM	(6) DESCRIPTION USABLE ON CODE	(7) U/M	(8) QTY INC IN UNIT
1	7	XBOZZ		61L4-1A	91506	CLIP,SPRING TENSION	EA	1
1	8	PAOZZ	5305-00-638-0653	MS35233-16	96906	SCREW MACHINE	EA	8

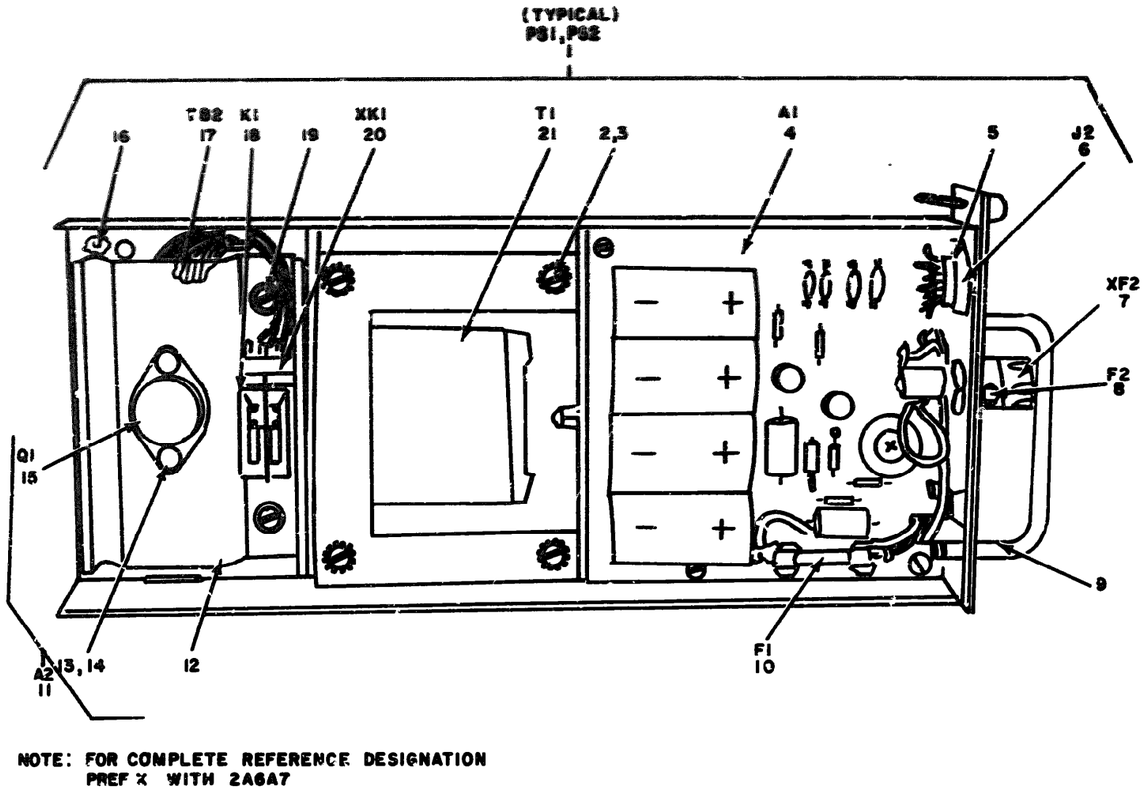

Figure 10. Power Supply PP-4645/TSC-26(2A6A7)

GROUP 010505 POWER SUPPLY OA-99445/TSC-26
(2A2A1)

(1) ILLUSTRATION FIG NO.	(1) ITEM NO.	(2) MAR CODE	(3) NATIONAL STOCK NUMBER	(4) PART NUMBER	(5) FSCM	(6) DESCRIPTION USABLE ON CODE	(7) UNIT	(8) QTY INC IN UNIT
10	2	XBOZZ		6-32X1STLCUPLSCRW	70318	SCREW,MACHINE	EA	4
10	3	XBOZZ		NO6STLCUPLEAT	70318	WASHER,LOCK	EA	4
10	5	XBOZZ		4-56STLCUPL	70318	NUT,PLAIN,HEXAGON	EA	2
10	6	XBOZZ		92583	91456	SOCKET,ELECTRONTUBE	EA	1
10	7	XBOZZ		FHN2UC	81349	FUSEHOLDER	EA	1
10	8	PAOZZ	5928-00-581-4144	MDX2AMP	71400	FUSE,CARTRIDGE	EA	1
10	9	XBOZZ		1042A	18708	HANDLE,BOW	EA	1
10	10	XBOZZ		MDL1AMP	71400	FUSE,CARTRIDGE	EA	1
10	12	XBOZZ		32146	18708	HEAT SIN	EA	1
10	13	XBOZZ		6-32STLNIPL	70318	NUT,PLAIN,HEXAGON	EA	2
10	14	XBOZZ		NO6STLCADPLINT	70318	WASHER,LOCK	EA	1
10	15	PAOZZ	5961-00-986-7516	2N1487	01349	TRANSISTOR	EA	1
10	16	XBOZZ		14648	18708	CONTACT ASSEMBL	EA	1
10	17	PAOZZ	5935-00-517-9453	1116A	18708	CONNECTOR,RECEPTACL	EA	1
10	18	PAOZZ	5945-00-945-0032	T154X179	02288	RELAY,ARMATURE	EA	1
10	19	XBOZZ		1044A	18708	SCREW,EXTERNALLY	EA	1
10	20	PAOZZ	5935-00-830-6349	30055-1	02288	SOCKET,PLUG-IN ELEC	EA	1
10	21	PAOZZ	5950-00-147-0661	116582	18708	TRANSFORMER,RADIO F	EA	1

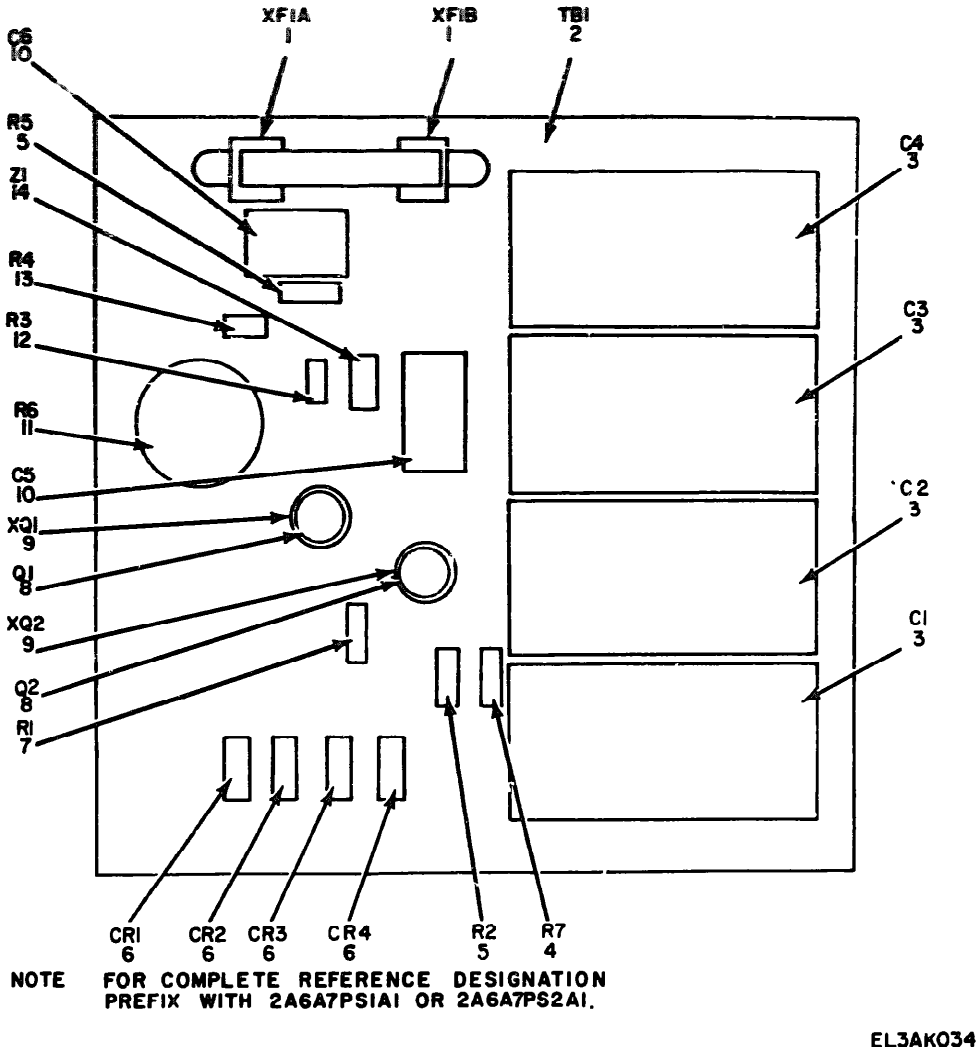

Figure 11 Power Supply PP-4645/TSC-26(2A6A7), Circuit Card Assembly

(1) ILLUSTRATION FIG. NO.	(1) ITEM NO.	(2) SMR CODE	(3) NATIONAL STOCK NUMBER	(4) PART NUMBER	(5) FSCM	(6) DESCRIPTION UNABLE ON CODE	(7) U/M	(8) QTY INC IN UNIT
11	1	PAOZZ	5990-00-636-3424	121006	25915	CLIP,ELECTRICAL	EA	4
11	2	XBOZZ		12008	16706	PRINTED WIRING	EA	1
11	3	PAOZZ	5905-00-279-3833	RC20GF100K	01349	RESISTOR,FIXED,COMP	EA	1
11	4	PAOZZ	5905-00-899-6887	RC20GF122K	01349	RESISTOR,FIXED,COMP	EA	2
11	5	PAOZZ	5941-00-762-2682	MC68	13327	SEMICONDUCTOR DEVIC	EA	4
11	6	PAOZZ	5905-00-195-6817	RC20GF102K	01349	RESISTOR,FIXED,COMP	EA	1
11	7	XBOZZ		2N2102	01349	TRANSISTOR	EA	2
11	8	PAOZZ	5935-00-925-9145	US-3305	91662	SOCKET,PLUG-IN ELEC	EA	2
11	9	XBOZZ		E07004A0500HM	79727	RESISTOR,VARIABLE	EA	1
11	10	PAOZZ	5905-00-111-4858	RC20GF471K	01349	RESISTOR	EA	1
11	11	PAOZZ	5905-00-942-9328	RC20GF561K	01349	RESISTOR,FIXED,COMP	EA	1
11	12	XBOZZ		1N3017B	01349	SEMICONDUCTOR	EA	1

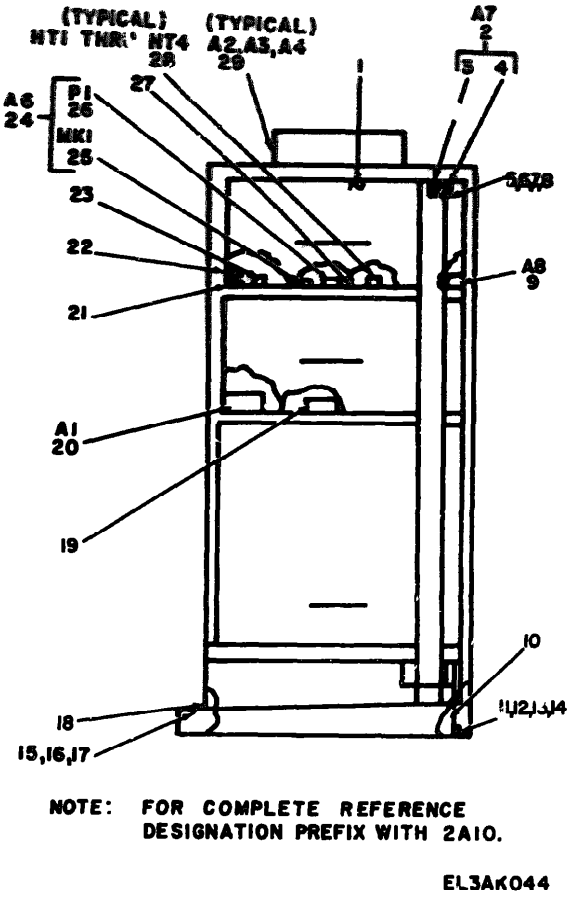

Figure 12 Cabinet Installation (2A10)

(1) ILLUSTRATION FIG. NO.	(2) ITEM NO.	(3) SMR CODE	(4) NATIONAL STOCK NUMBER	(5) PART NUMBER	(6) FSCM	(7) DESCRIPTION USABLE ON CODE	(8) QTY	(9) QTY REQ INC IN UNIT
						GROUP 0107 CABINET INSTALLATION (2A10A)		
1-2	2-4	KBOFF		5962-5370042-1	97403	MICROPHONE, DYNAMIC	EA	1

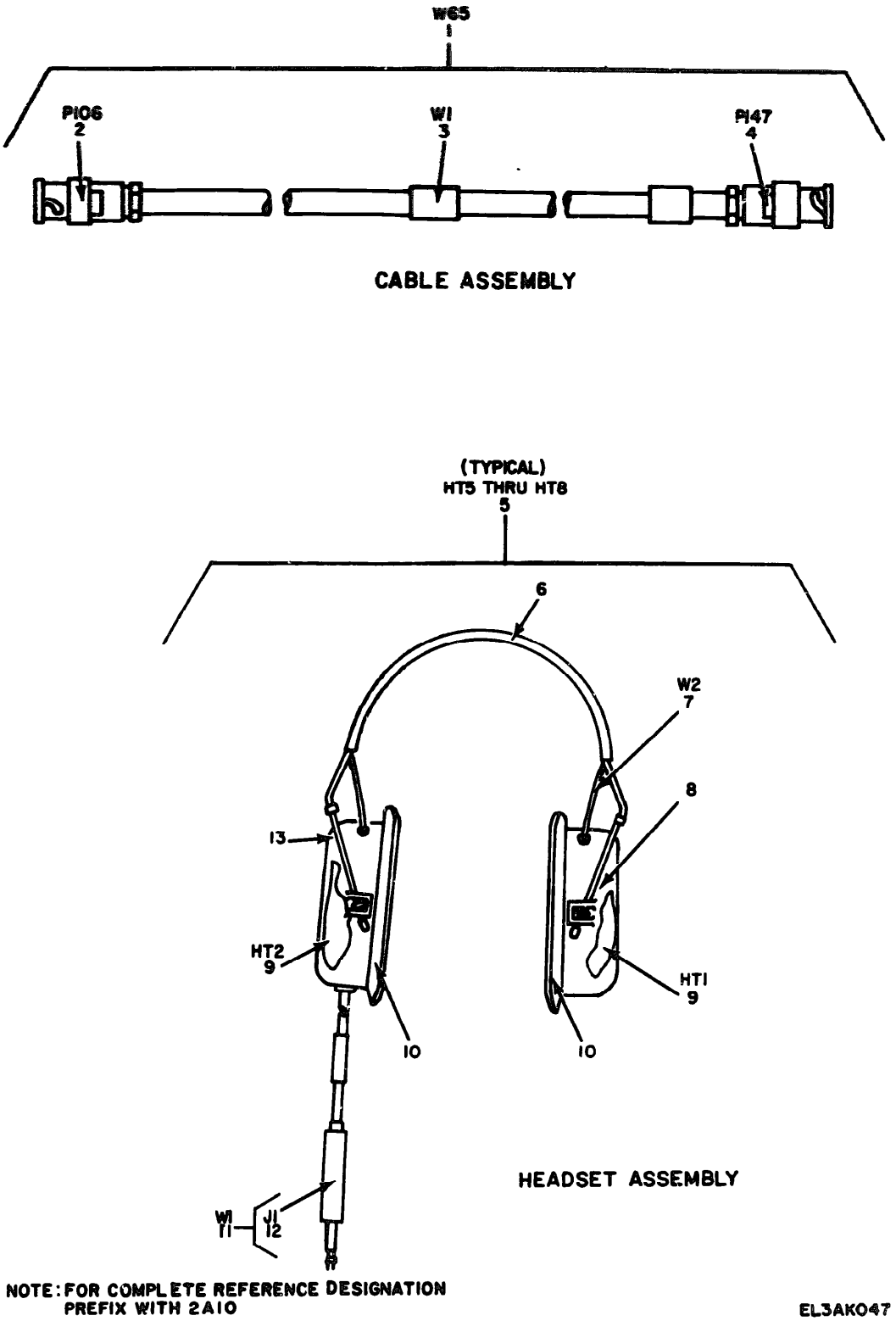

Figure 13. Cabinet Installation (2A10), Cable Assembly and Headset Assembly

(1) ILLUSTRATION (a) FIG. NO.	(1) ILLUSTRATION (b) ITEM NO.	(2) SMR CODE	(3) NATIONAL STOCK NUMBER	(4) PART NUMBER	(5) FSCM	(6) DESCRIPTION USABLE ON CODE	(7) UOM	(8) QTY INC IN UNIT
13	1	XBDFF		SMC537000-7	97403	CABLE ASSEMBL.....	EA	1
13	11	PAUFF	59995-00-145-0161	6144G	62672	CORD ASSEMBLY,ELECT.....	EA	1

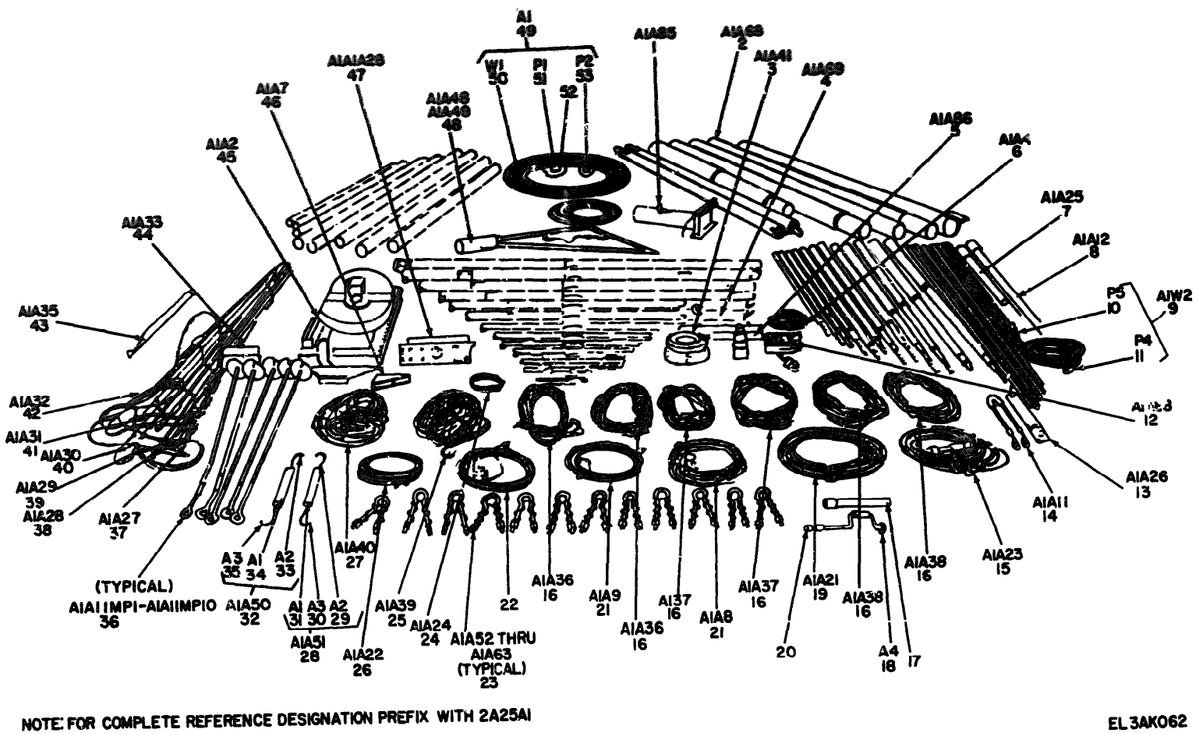

Figure 14 Antenna (2A25A1)

(1) ILLUSTRATION (a) FIG. NO.	(1) ILLUSTRATION (b) ITEM NO.	(2) SMR CODE	(3) NATIONAL STOCK NUMBER	(4) PART NUMBER	(5) FSCM	(6) DESCRIPTION / USABLE ON CODE	(7) U/M	(8) QTY INC IN UNIT
						GROUP 011301 ANTENNA (2A25A1)		
14	9	XBOZZ		515-5346-003	95104	CABLE ASSY,PUNE	EA	1
14	10	XBOZZ		MAUI-20-1P57	71468	CONNECTOR,PLUG,ELEC	EA	1
14	11	PAUZZ	5935-00-594-4387	MAUG-20-1GP3	71468	CONNECTOR,PLUG,ELEC	EA	1
14	15	XBOZZ		515-5290-001	95104	CABLE,SP	EA	1
14	19	PAUZZ	4810-00-104-8910	515-5270-001	95104	CABLE A Y TEMS	EA	1
14	24	XBOZZ		515653086001	95104	CHAIN,L FING	EA	1
14	26	XBOZZ		515-5338-001	95104	CABLE,RELEASE	EA	1
14	47	XBOFF		C-6758/TSC-26	80058	CONTROL-INDICATOR	EA	1
14	48	XBOFB		764-9005-001	95104	GUY ROPE ASSEMBL	EA	2

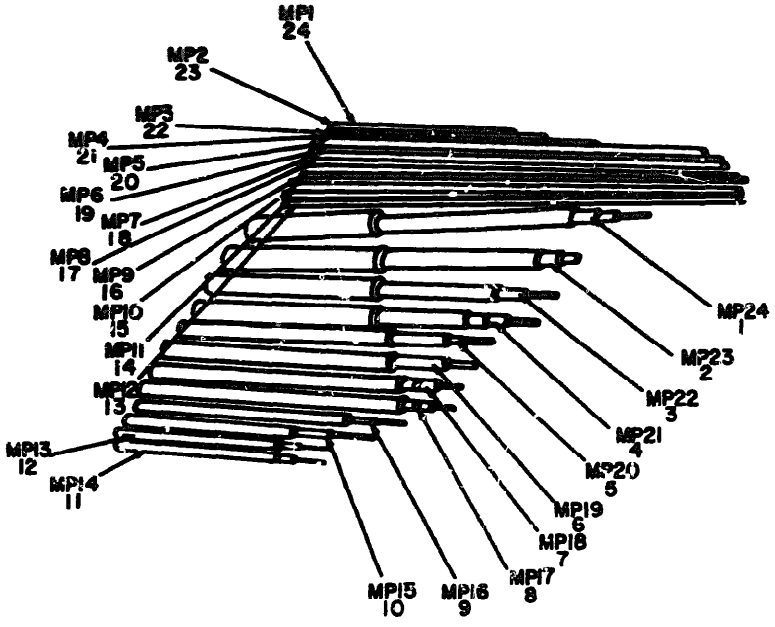

ANTENNA ELELEMENTS

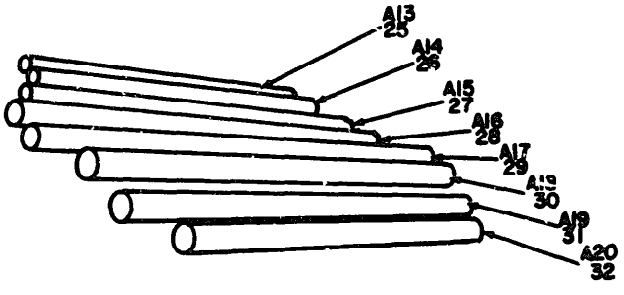

BOOM SECTIONS

NOTE: FOR COMPLETE REFERENCE DESIGNATION
PREFIX WITH 2A25A1A1

EL3AK064

Figure 15. Antenna (2A25A1) Elements and Boom Sections

(1) ILLUSTRATION (a) FIG. NO.	(1) ILLUSTRATION (b) ITEM NO.	(2) SMR CODE	(3) NATIONAL STOCK NUMBER	(4) PART NUMBER	(5) FSCM	(6) DESCRIPTION USABLE ON CODE	(7) U/M	(8) QTY INC IN UNIT
12	12	PAUZZ	5895-00-949-7428	513-3.85-J02	55104	ELEMENT REAR.....	EA	1

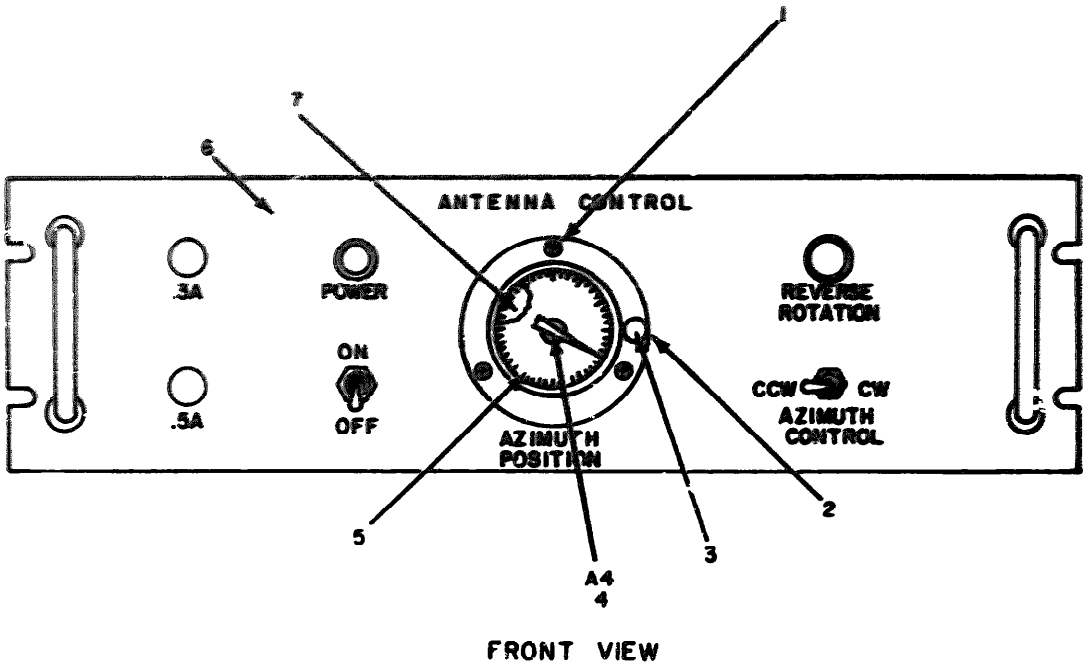

NOTE: FOR COMPLETE REFERENCE DESIGNATION PREFIX WITH 2A25A1A1A1A28

EL3AK067

Figure 16. Control Indicator C-6758/TSC-26 (2A25A1A28) (Sheet 1 of 2).

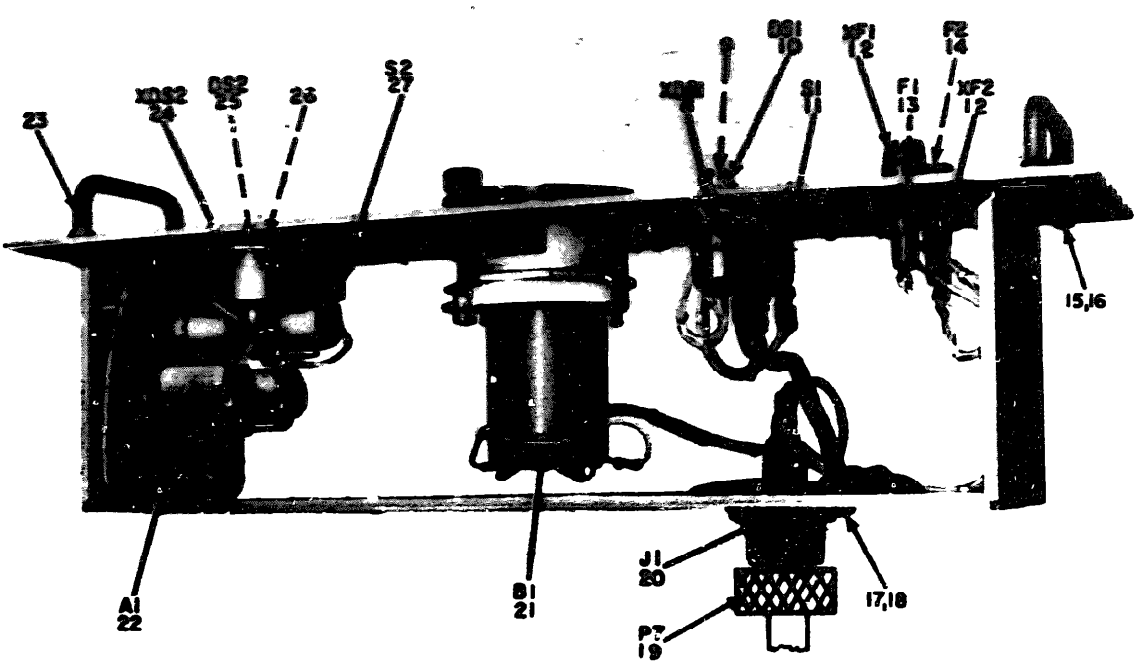

SIDE VIEW

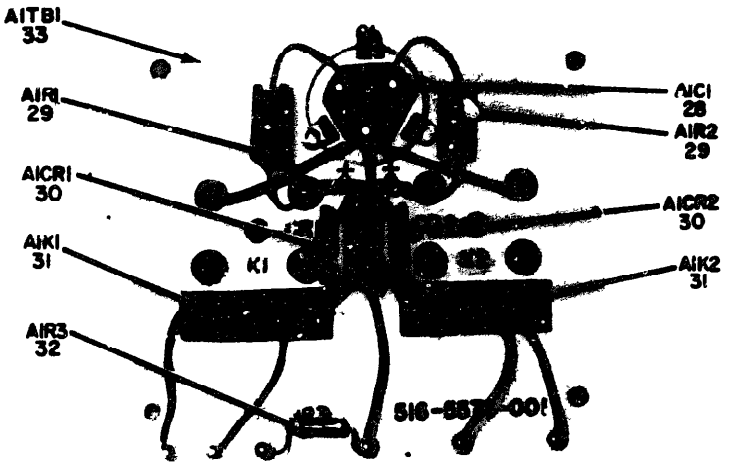

CIRCUIT BOARD

NOTE. FOR COMPLETE REFERENCE DESIGNATION PREFIX WITH 2A25A1A1A1A28

EL3AK068

Figure 16 Control Indicator C-6758/TSC-26 (2A25A1A2A28) (Sheet 2 of 2)

(1) ILLUSTRATION (a) FIG. NO.	(b) ITEM NO.	(2) SMR CODE	(3) NATIONAL STOCK NUMBER	(4) PART NUMBER	(5) FSCM	(6) DESCRIPTION USABLE ON CODE	(7) U/M	(8) QTY INC IN UNIT
						GROUP 01130101 CAMBER-INDICATOR C-6784/TSC-26 (2A25A1A2A29)		
10	[illegible]	[illegible]		[illegible]	[illegible]	[illegible]	EA	1
10	[illegible]	[illegible]		[illegible]	[illegible]	LAMP,GLOW	EA	1
10	[illegible]	[illegible]	5920-00-896-9511	[illegible]	[illegible]	FUSEHOLDER,EXTRACTO	EA	2
10	[illegible]	[illegible]	5920-00-235-8362	[illegible]	[illegible]	FUSE,CARTRIDGE	EA	1
10	[illegible]	[illegible]	5920-00-201-0224	[illegible]	[illegible]	FUSE,CARTRIDGE	EA	1
10	[illegible]	[illegible]	5340-00-184-1258	[illegible]	[illegible]	HANDLE,DUM	EA	2

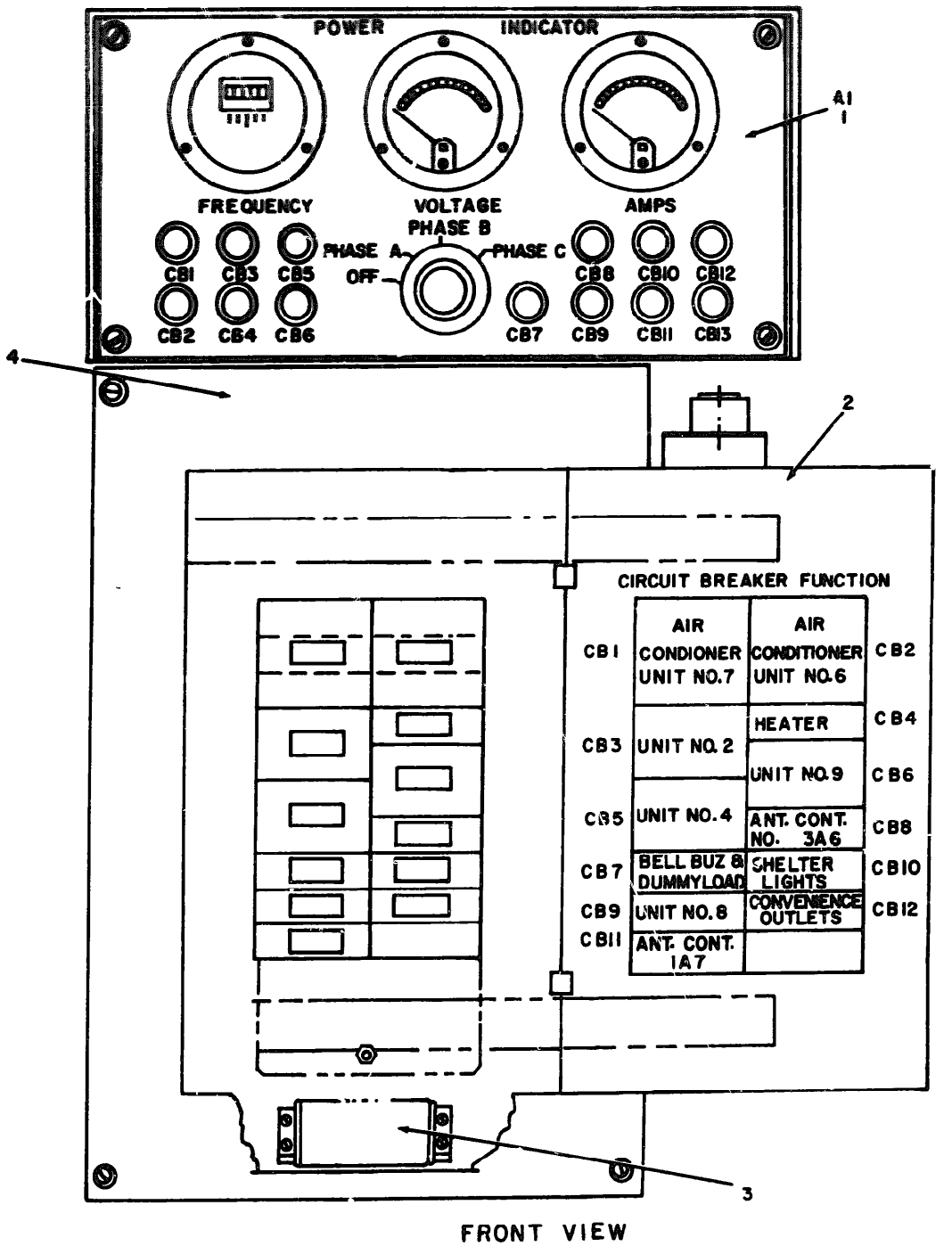

Figure 17 Distribution Box (3A1)

(1) ILLUSTRATION (a) FIG. NO.	(1) ILLUSTRATION (b) ITEM NO.	(2) SMR CODE	(3) NATIONAL STOCK NUMBER	(4) PART NUMBER	(5) FSCM	(6) DESCRIPTION USABLE ON CODE	(7) U/M	(8) QTY INC IN UNIT
						GROUP 0201 DISTRIBUTION BOX (3A1)		
1/	4	KOOFB		SMU3GU4L-1	51963	PANEL, INSULATOR	EA	8

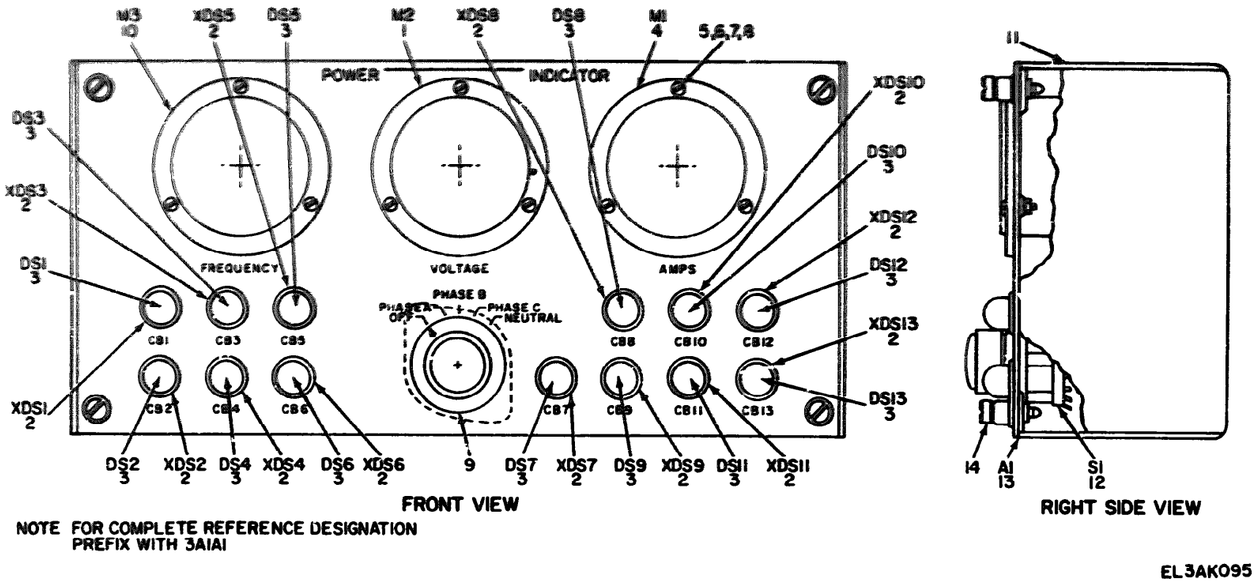

Figure 18. Panel Indicator (3A1A1).

(1) ILLUSTRATION FIG NO	(2) ITEM NO	(3) SMR CODE	(4) NATIONAL STOCK NUMBER	(5) PART NUMBER	(6) FSCM	(7) DESCRIPTION USABLE ON CODE	U/M	QTY REQ IN UNIT
						GROUP 020101 PANEL INDICATOR (3A1A1).		
[illegible]	[illegible]	[illegible]	5990-00-259-9100	[illegible]	[illegible]	LAMP, GLOW	EA	13
[illegible]	[illegible]	[illegible]	5935-00-579-1210	MS91528-[illegible]Z5	[illegible]	KNOB	EA	1

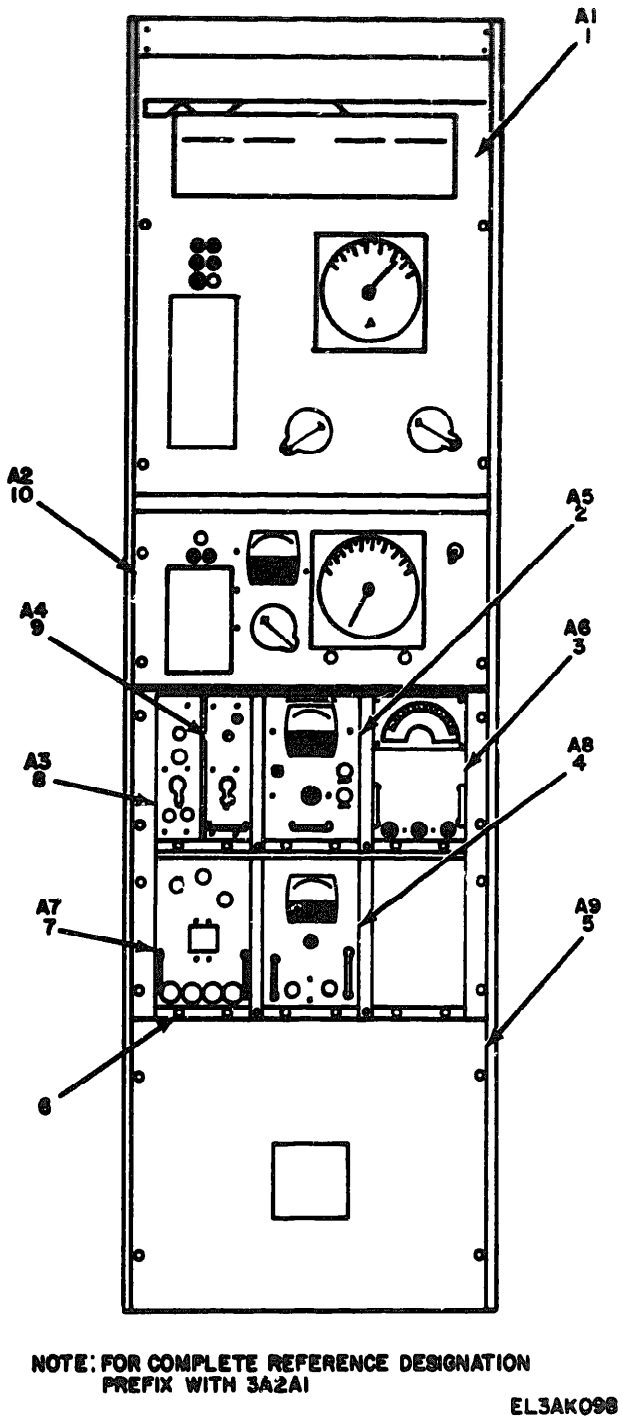

Figure 19. Transmitting Set, Radio (3A2A1)

(1) ILLUSTRATION (a) FIG. NO.	(1) ILLUSTRATION (b) ITEM NO.	(2) SMR CODE	(3) NATIONAL STOCK NUMBER	(4) PART NUMBER	(5) FSCM	(6) DESCRIPTION USABLE ON CODE	(7) U/M	(8) QTY INC IN UNIT
						GROUP 020201 TRANSMITTING SET, RADIO (3A2A1)		
19	1	XBDZZ		3U003-4G1A1-2	97403	AMPLIFIER	EA	1
19	2	XBDZZ		301-46-50-00	97403	AMPLIFIER-MODULATOR	EA	1

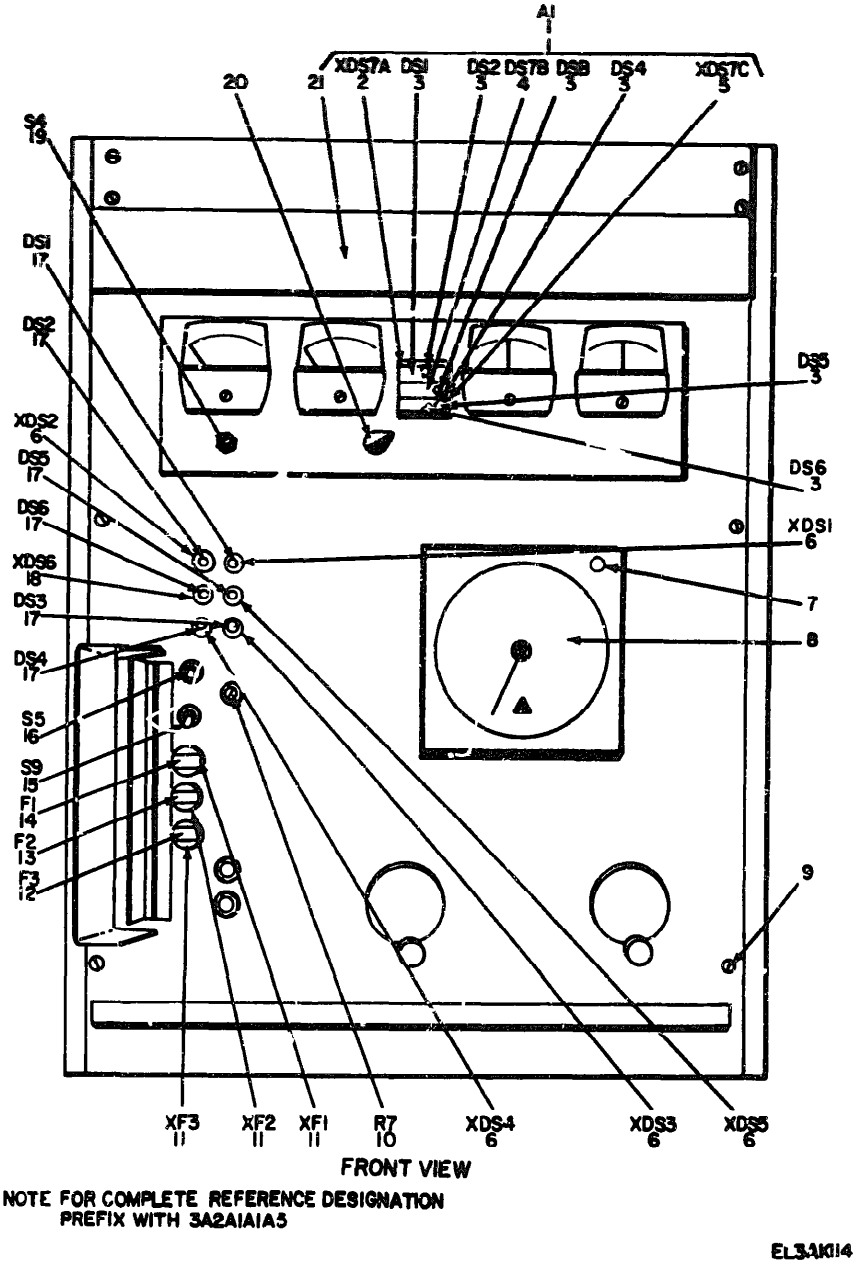

Figure 20 Amplifier, Radio Frequency (9151) (3A2A1A1), Panel Assembly, Front

(1) ILLUSTRATION (a) FIG. NO.	(b) ITEM NO.	(2) SMR CODE	(3) NATIONAL STOCK NUMBER	(4) PART NUMBER	(5) FSCM	(6) DESCRIPTION USABLE ON CODE	(7) U/M	(8) QTY INC IN UNIT
						GROUP 02020101 AMPLIFIER, RADIO FREQUENCY (1A2A1A1)		
20	3	PAUZZ	6240-00-155-7857	MS25237-328	96906	LAMP,INCANDESCENT	EA	6
20	12	PAUZZ	5920-00-280-8342	312001	75915	FUSE,CARTRIDGE	EA	1
20	13	PAUZZ	5920-00-480-1228	312004	75915	FUSE,CARTRIDGE	EA	1
20	14	PAUZZ	5920-00-280-8344	FJ2A250V12A5	81349	FUSE,CARTRIDGE	EA	1
20	17	PAUZZ	6240-00-723-3378	MS25252C4A	96906	LAMP,GLOW	EA	6
20	20	PAUZZ	5355-00-552-1810	MS91528-1A16	96906	KNOB	EA	1

REF. DES.	ITEM NO.	REF. DES.	ITEM NO.
C2	1	C23	4
C3	1	C24	4
C4	2	CR1	7
C5	3	L2	8
C6	4	R1	9
C7	4	R2	9
C8	4	R3	10
C9	4	R4	11
C10	4	R7	12
C11	4	R8	13
C12	4	R9	14
C13	4	R22	15
C14	4	R23	16
C15	4	T1	17
C16	4	V1	18
C17	2	V2	18
C18	2	XV1	19
C21	5	XV2	19
C22	6		

EL3AK120

Figure 21. Amplifier, Radio Frequency 9151 (3A2A1A1), Amplifier Subassembly (A7A2)

(1) ILLUSTRATION (a) FIG. NO.	(b) ITEM NO.	(2) SMR CODE	(3) NATIONAL STOCK NUMBER	(4) PART NUMBER	(5) FSCM	(6) DESCRIPTION USABLE ON CODE	(7) UNIT
21	14	PAUZZ	5960-00-679-5878	5726	01347	ELECTRON TUBE	EA

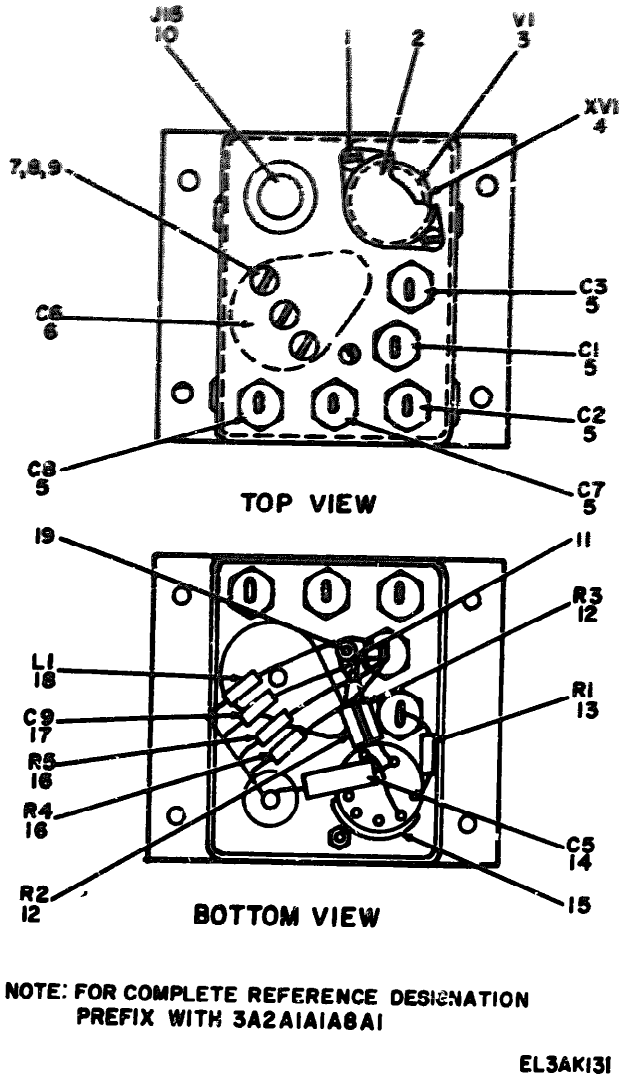

Figure 22. Amplifier, Radio Frequency (9151) (3A2A1A1) Radio Frequency Amplifier Subassembly (A8A1)

(1) ILLUSTRATION (a) FIG. NO.	(1) ILLUSTRATION (b) ITEM NO.	(2) SMR CODE	(3) NATIONAL STOCK NUMBER	(4) PART NUMBER	(5) FSCM	(6) DESCRIPTION	(7)	(8) QTY INC IN UNIT
22	3	PAOOZ	5960-00-134-919	8465	60131	ELECTRON TUBE	EA	1

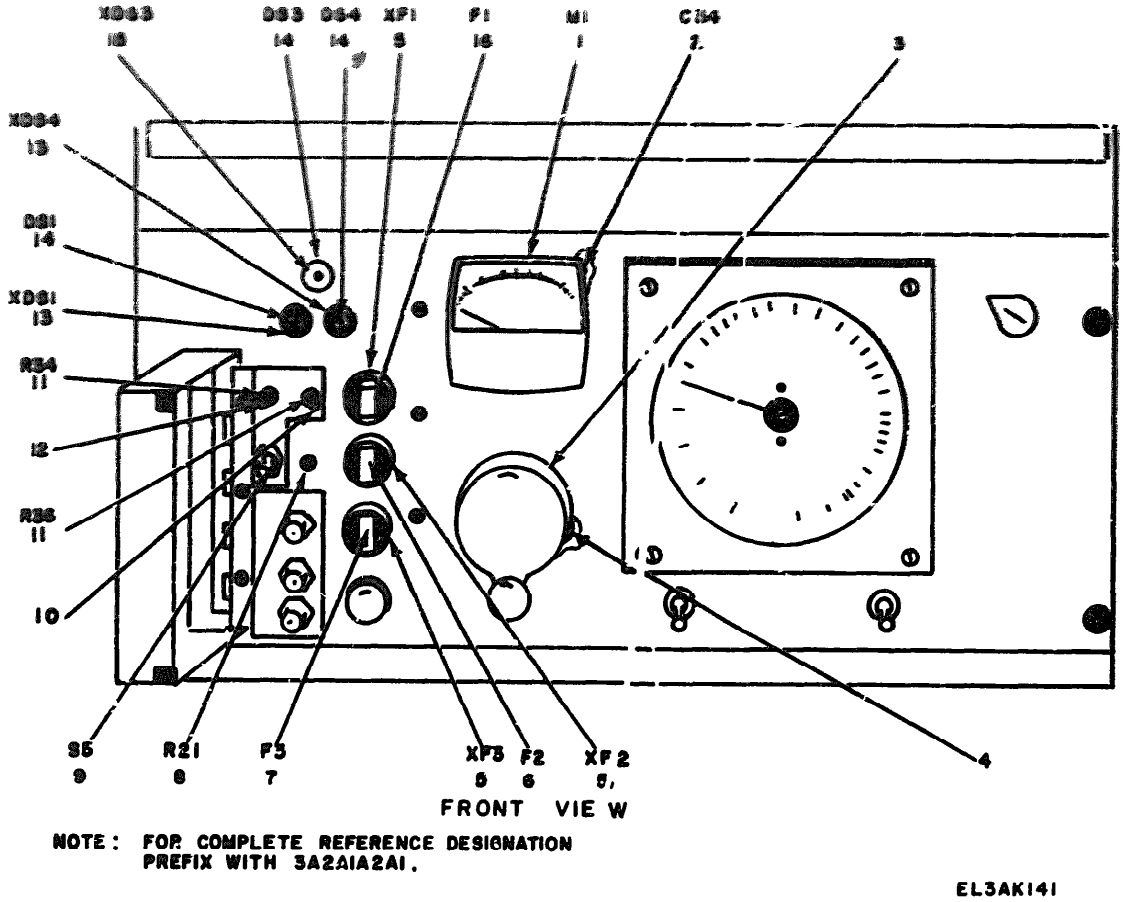

Figure 23. Amplifier, Radio Frequency (3A2A1A2), Amplifier Subassembly (A1)

(1) ILLUSTRATION (a) FIG NO	(b) ITEM NO	(2) SMR CODE	(3) NATIONAL STOCK NUMBER	(4) PART NUMBER	(5) FSCM	(6) DESCRIPTION USABLE ON CODE	(7) U/M	(8) QTY INC IN UNIT
						GROUP 02020102 AMPLIFIER, RADIO FREQUENCY (3A2A1A2)		
23	6	PAUZZ	5320-00-350-2199	312003	75915	FUSE,CARTRI TASK 4A	EA	1
23	7	XDOZZ		MDL1-1AMP	71400	FUSE,CARTRIDGE	EA	1
23	14	PAUZZ	2150-00-723-3578	MS25252LVA	96906	LAMP,DL3W	EA	3
23	15	PAUZZ	5920-0-937-3713	MDL1-2AMP	71400	FUSE,CARTRIDGE	EA	1

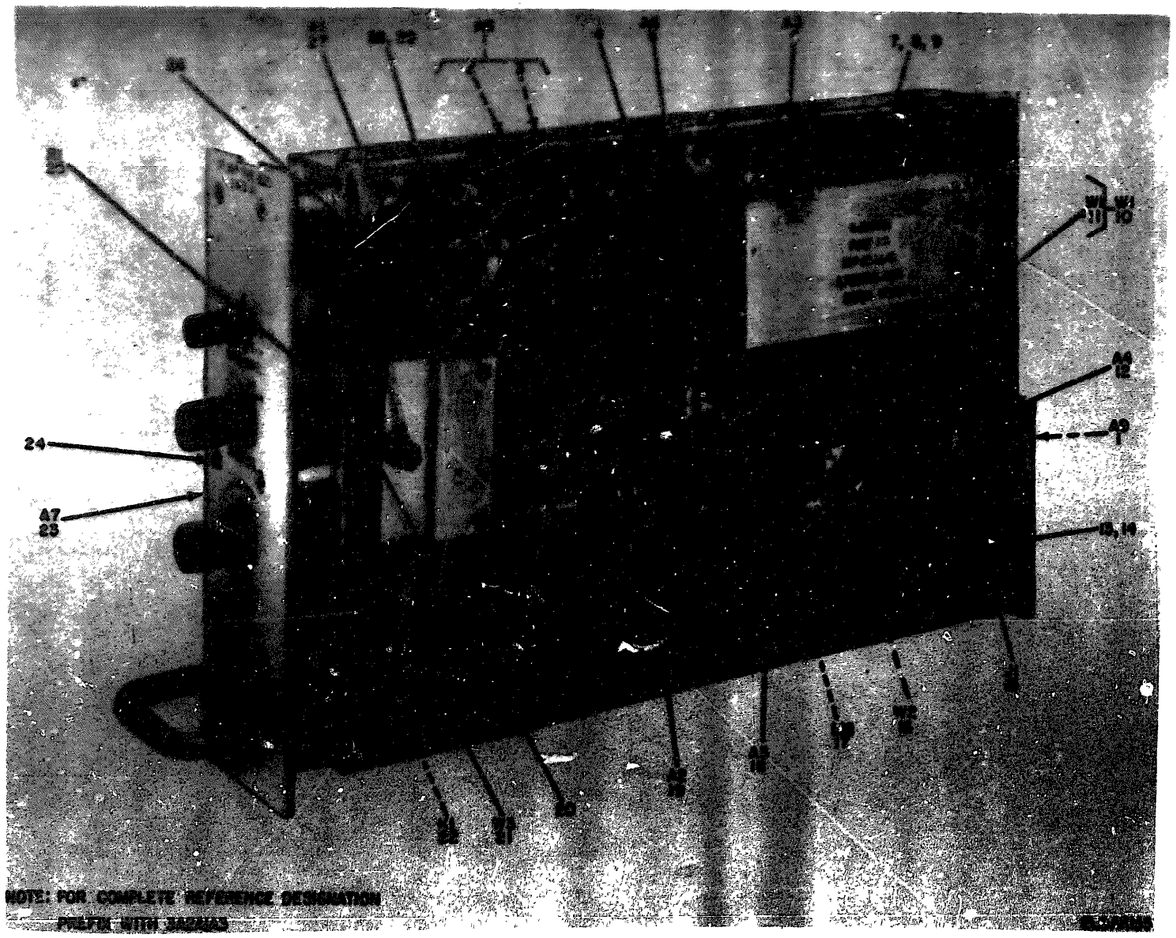

Figure 24 IF Amplifier (3A2A1A3).

(1) ILLUSTRATION (a) FIG. NO.	(1) ILLUSTRATION (b) ITEM NO.	(2) SMR CODE	(3) NATIONAL STOCK NUMBER	(4) PART NUMBER	(5) FSCM	(6) DESCRIPTION USABLE ON CODE	(7) QTY	(8) QTY INC IN UNIT
						GROUP 02020103 IF AMPLIFIER (3A2A1A5)		
24	3	XB022		391-22-00-31	[illegible]	SHIELD,ELECTROMAGNETIC	CA	1

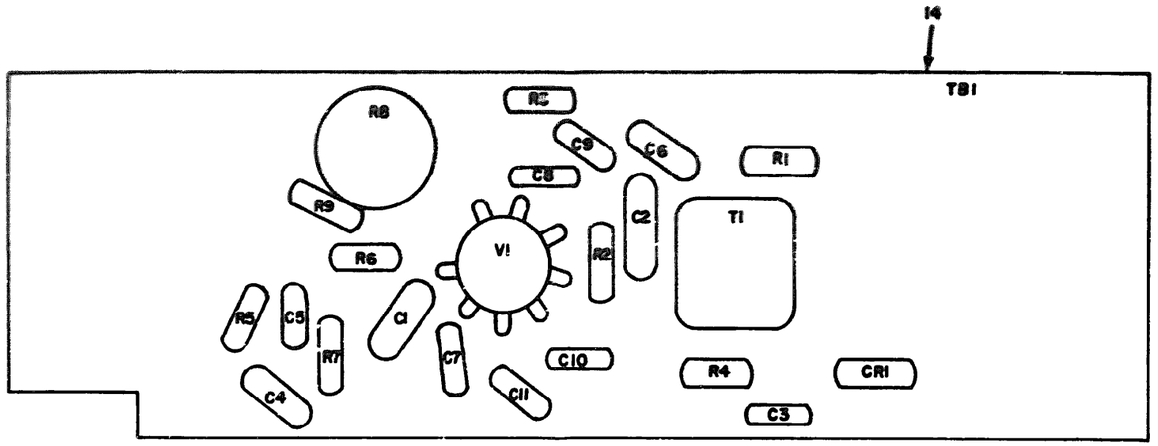

REF DES	ITEM NO	REF DES	ITEM NO	REF DES	ITEM NO	REF DES	ITEM NO	REF DES	ITEM NO	REF DES	ITEM NO
C1	1	C5	3	C9	3	R1	5	R5	9	R9	11
C2	2	C6	3	C10	3	R2	6	R6	9	T1	12
C3	3	C7	3	C11	3	R3	7	R7	9	V1	13
C4	3	C8	3	CR1	4	R4	8	R8	10		

NOTE: FOR COMPLETE REFERENCE DESIGNATION PREFIX WITH 3A2A1A3A1

EL3AK156

Figure 26 IF Amplifier (3A2A1A3). Circuit Card Assembly (A1)

TM 11-5895-482-20P

(1) ILLUSTRATION (a) FIG. NO.	(1) ILLUSTRATION (b) ITEM NO.	(2) SMR CODE	(3) NATIONAL STOCK NUMBER	(4) PART NUMBER	(5) FSCM	(6) DESCRIPTION USABLE ON CODE	(7) UOM	(8) QTY INC IN UNIT
25	13	[illegible]		5840	01349	ELECTRON TUBE.....	EA	1

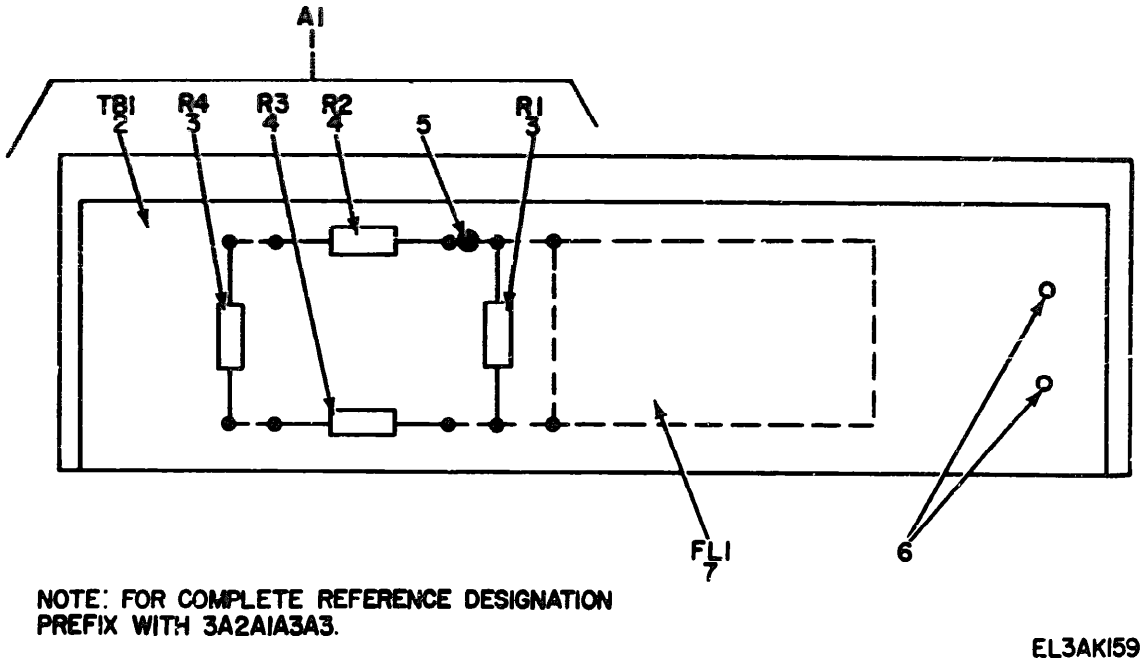

Figure 26. IF Amplifier (3A2A1A3), Band Puss Alter Assembly (A3)

(1) ILLUSTRATION (a) FIG. NO.	(b) ITEM NO.	(2) SMR CODE	(3) NATIONAL STOCK NUMBER	(4) PART NUMBER	(5) FSCM	(6) DESCRIPTION USABLE ON CODE	(7) U/M	(8) QTY INC IN UNIT
26		PAOZZ	5945-00-760-6433	307-22-11-02	97904	FILTER	EA	1

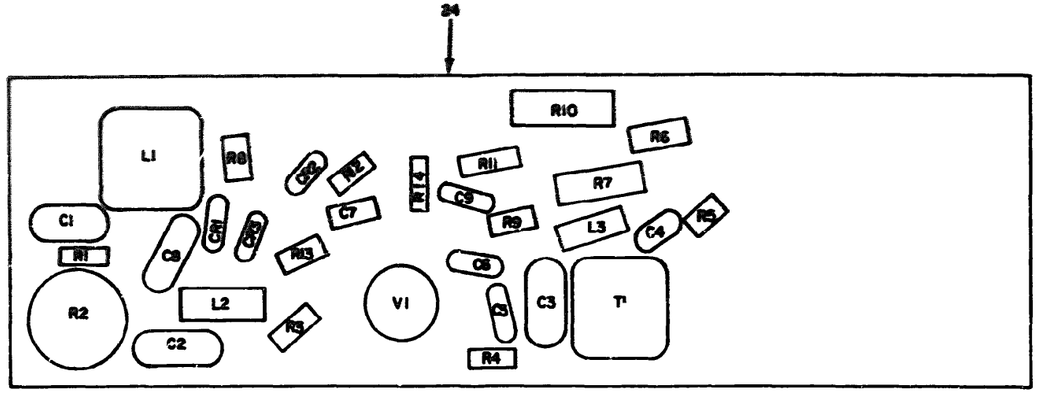

REF DES.	ITEM NO	REF. DES.	ITEM NO.	REF. DES	ITEM NO	REF. DES.	ITEM NO.	REF. DES.	ITEM NO	REF. DES.	ITEM NO.
C1	1	C7	5	L1	8	R4	13	R10	18	V1	23
C2	2	C8	6	L2	9	R5	14	R11	19		
C3	3	C9	4	L3	10	R6	15	R12	20		
C4	4	CR1	7	R1	11	R7	16	R13	17		
C5	4	CR2	7	R2	12	R8	17	R14	21		
C6	4	CR3	7	R3	13	R9	13	T1	22		

NOTE: FOR COMPLETE REFERENECE DESIGNATION PREFIX WITH 3A2A1A3A4

EL3AK160

Figure 27 IF Amplifier (3A2A1A3), Circuit Card Assembly (A4)

(1) ILLUSTRATION (a) FIG. NO.	(1) ILLUSTRATION (b) ITEM NO.	(2) SMR CODE	(3) NATIONAL STOCK NUMBER	(4) PART NUMBER	(5) FSCM	(6) DESCRIPTION USABLE ON CODE	(7) UOM	(8) QTY INC. IN UNIT
27	4	XBDZZ		[illegible]	[illegible]	CAPACITOR, FIXED, MICA	EA	2
27	24	XBDZZ		[illegible]	[illegible]	ELECTRON TUBE	EA	2

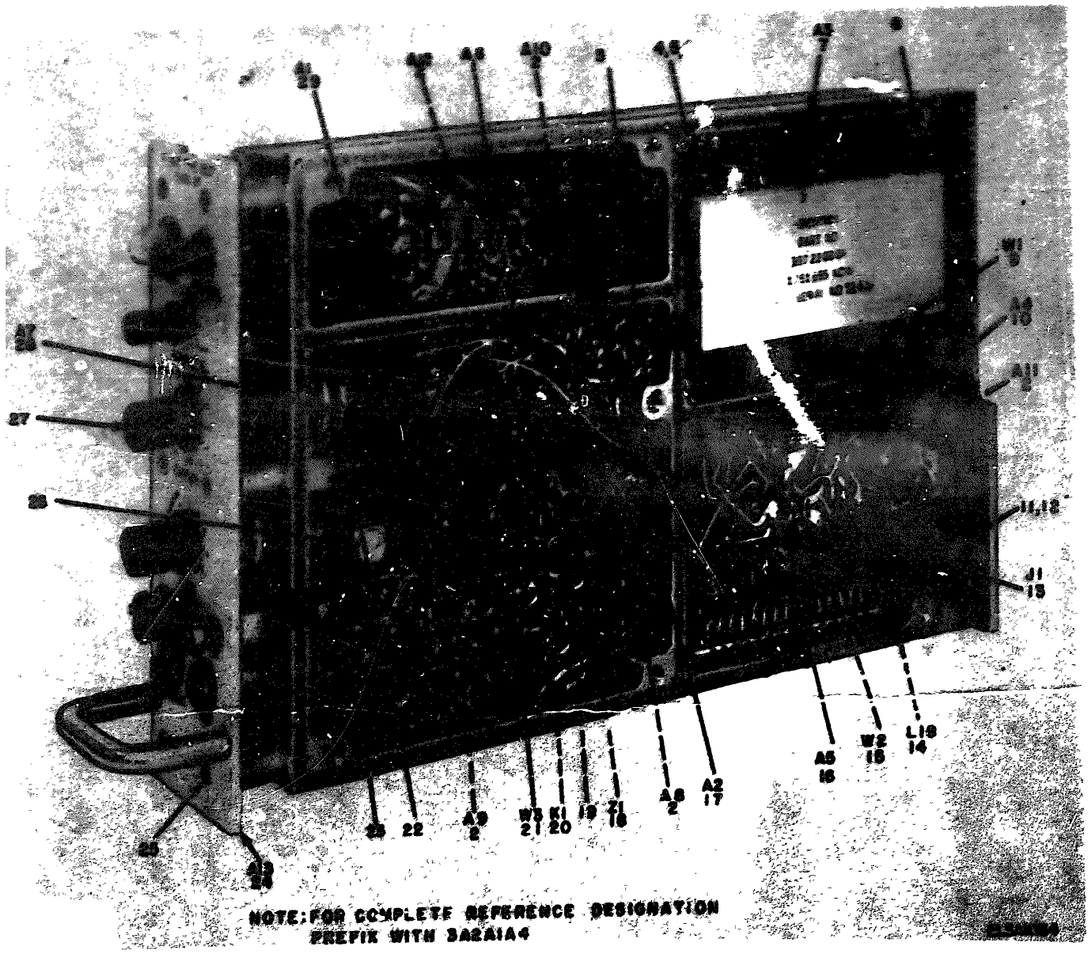

Figure 28. IF Amplifier (652T) (3A2A1A4).

(1) ILLUSTRATION (a) FIG. NO.	(b) ITEM NO.	(2) SMR CODE	(3) NATIONAL STOCK NUMBER	(4) PART NUMBER	(5) FSCM	(6) DESCRIPTION USABLE ON CODE	(7) UOM	(8) QTY INC IN UNIT
						GROUP 0202104 IF AMPLIFIER (3A2A1A4)		
20	19	X3022		3A0A3-4036-1	97983	WIRING HARNESS	EA	1
20	21	X3022		3A0A3-4041-1	97983	WIRING HARNESS	EA	1
20	22	X3022		300-00-05-60	97983	SPACER,SLEEVE	EA	1
20	23	X3022		2102-04	97983	TERMINAL,LUG	EA	3

REF. DES.	ITEM NO.	REF. DES.	ITEM NO.
C1	1	F5	15
C2	2	R6	16
C3	3	R7	17
C4	4	R8	18
C5	4	R9	14
C6	4	R10	19
C7	5	R11	20
C8	6	R12	21
C9	4	R13	18
CR1	7	R14	22
CR2	7	R15	23
CR3	7	R16	24
HY1	8	R17	23
L1	9	R18	25
L2	10	R20	26
L3	11	T1	27
R1	12	V1	28
R2	13		
R3	14		
R4	14		

EL3AK169

Figure 29 IF Amplifier (652T) (3A2A1A4). Circuit Card Assembly (A4)

(1) ILLUSTRATION (a) FIG. NO.	(1) ILLUSTRATION (b) ITEM NO.	(2) SMR CODE	(3) NATIONAL STOCK NUMBER	(4) PART NUMBER	(5) FSCM	(6) DESCRIPTION USABLE ON CODE	UNIT OF MEAS	QTY INC IN UNIT
[illegible]	[illegible]	[illegible]		[illegible]	[illegible]	ELECTRON TUBE	EA	1

REF. DES.	ITEM NO.	REF. DES.	ITEM NO.	REF. DES.	ITEM NO.	REF. DES.	ITEM NO.
C1	1	C21	1	R2	17	R19	32
C2	2	C22	8	R3	18	R20	33
C3	1	C23	1	R4	19	R21	34
C5	3	C24	9	R5	20	R22	21
C6	2	CR1	10	R6	21	R23	35
C8	1	CR2	10	R7	22	R24	24
C9	1	CR3	10	R8	23	R25	36
C10	1	CR4	11	R9	21	R26	37
C11	4	CR5	12	R10	21	R30	28
C12	1	CR6	12	R11	24	T1	38
C13	5	CR7	12	R12	25	T2	39
C14	6	CR8	12	R13	26	V1	40
C15	1	CR9	10	R14	27	V2	40
C16	1	CR10	13	R15	28	V3	41
C18	7	K1	14	R16	29		
C19	1	L1	15	R17	30		
C20	1	R1	16	R18	31		

EL3AK171

Figure 30 IF Amplifier (652T) (3A2A1A4), Circuit Cd Assembly (A6)

(1) ILLUSTRATION (a) FIG. NO.	(b) ITEM NO.	(2) SMR CODE	(3) NATIONAL STOCK NUMBER	(4) PART NUMBER	(5) FSCM	(6) DESCRIPTION USABLE ON CODE	(7) U/M	(8) QTY REQ IN UNIT
30	40	PAUZZ	5905-00-281-8619	6021	01349	ELECTRON TUBE	EA	4
30	45	XBUZZ		5440	01349	ELECTRON TUBE	EA	1

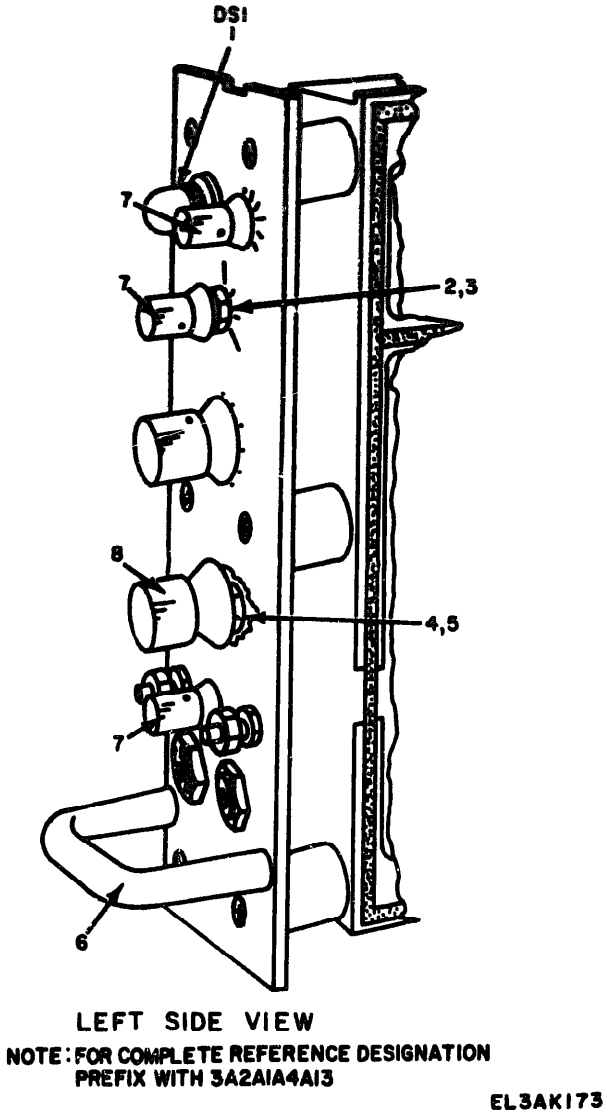

Figure 31. IF Amplifier (652T), Amplifier Subassembly.

(1) ILLUSTRATION (a) FIG. NO.	(1) ILLUSTRATION (b) ITEM NO.	(2) SMR CODE	(3) NATIONAL STOCK NUMBER	(4) PART NUMBER	(5) FSCM	DESCRIPTION USABLE ON CODE	UNIT	QTY INC IN UNIT
11	2	[illegible]		[illegible]	[illegible]	LAMP,GLOW	EA	2

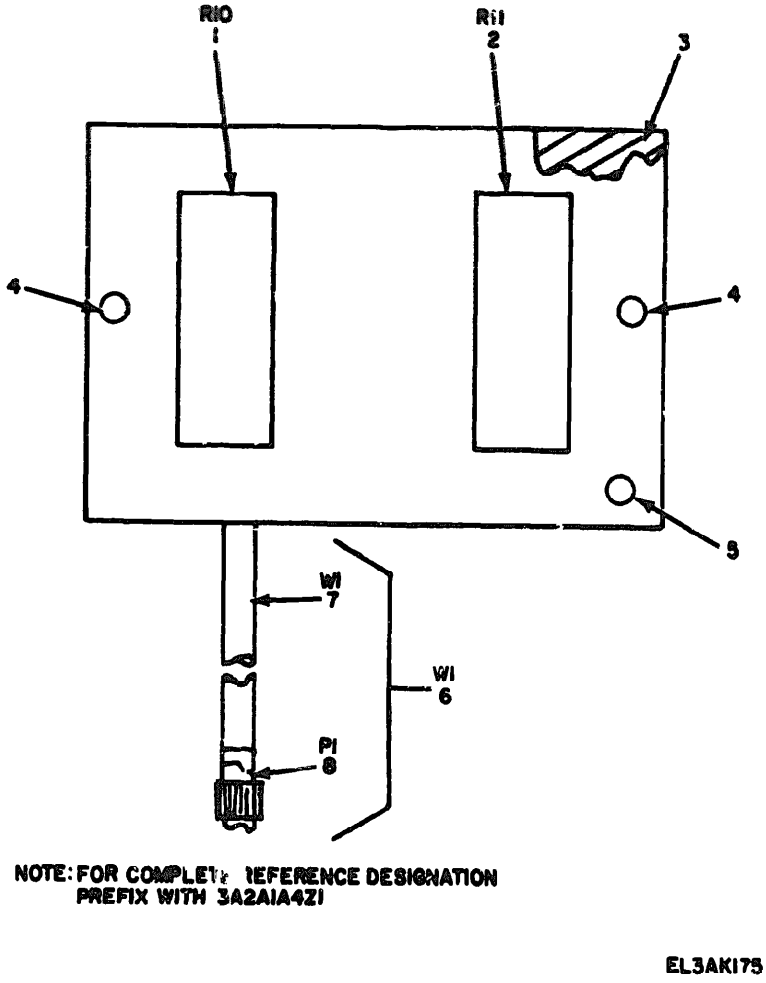

Figure 32. IF Amplifier (652T) (3A2A1A4), Resistor Assembly (Z1).

(1) ILLUSTRATION (a) FIG. NO.	(b) ITEM NO.	(2) SMR CODE	(3) NATIONAL STOCK NUMBER	(4) PART NUMBER	(5) FSCM	(6) DESCRIPTION USABLE ON CODE	(7) UOM	(8) QTY INC IN UNIT
32	2	XBOZZ		M1-0711000F	12126	RESISTOR,FIXED,FILM.....	EA	1
32	3	XBOZZ		301-22-00-59	97963	SHIELD,RESISTOR.....	EA	1
32	5	XBOZZ		4176-3-0519	97933	TERMINAL,STUD.....	EA	1

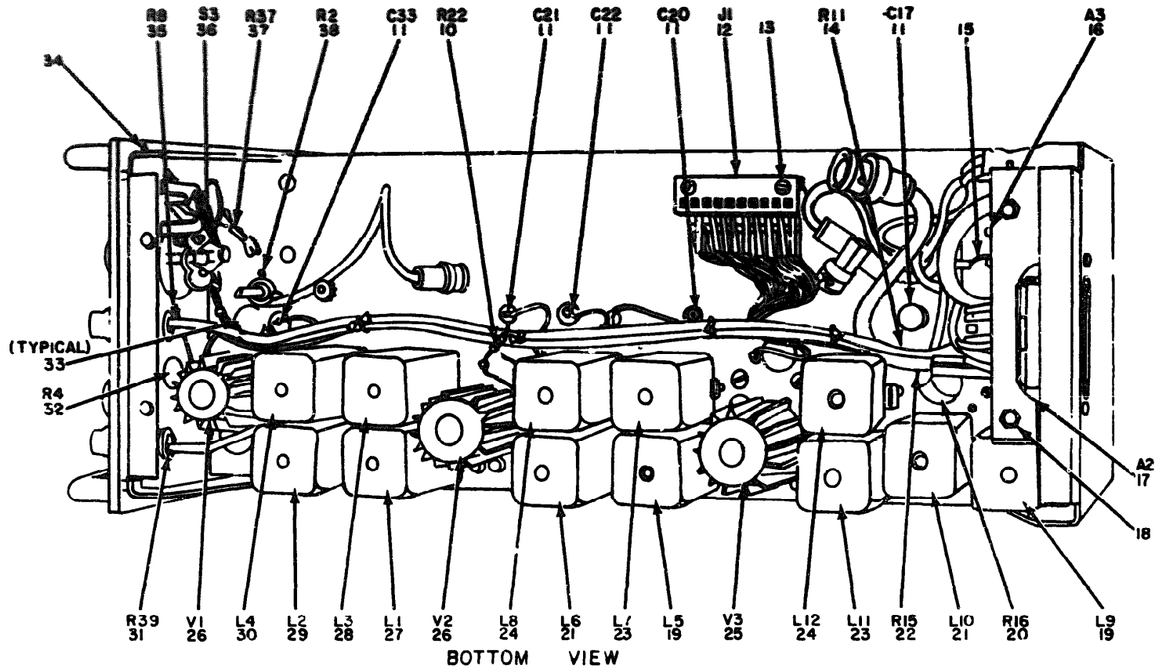

NOTE: FOR COMPLETE REFERENCE DESIGNATION PREFIX WITH 3A2A1A6

EL3AK178

Figure 33 Amplifier Modulator (653B) (3A2A1A6)

(1) ILLUSTRATION (a) FIG NO.	(1) ILLUSTRATION (b) ITEM NO.	(2) RMR CODE	(3) NATIONAL STOCK NUMBER	(4) PART NUMBER	(5) FSCM	(6) DESCRIPTION / USABLE ON CODE	(7) U/M	(8) QTY INC IN UNIT
						GROUP 02020106 AMPLIFIER-MODULATOR		
						(3A2A1A6)		
33	15	XBOZZ		021-11-07-45-00	97983	SCREW,MACHINE.....	EA	8

REF DES	ITEM NO	REF DES	ITEM NO	REF DES	ITEM NO	REF DES	ITEM NO	REF DES	ITEM NO	REF DES	ITEM NO
C1	1	C9	6	CR4	8	R2	14	R10	21	T2	28
C2	2	C10	3	CR5	9	R3	15	R11	20	T3	29
C3	3	C11	6	CR6	10	R4	16	R12	22	T4	29
C4	4	C12	7	J1	11	R5	17	R13	23	V1	30
C5	5	C13	7	L1	12	R6	18	R14	24		
C6	3	CR1	8	L2	12	R7	19	R15	25		
C7	6	CR2	8	L3	12	R8	20	R16	26		
C8	2	CR3	8	R1	13	R9	20	T1	27		

EL3AK186

Figure 34. Amplifier Modulator (653B) (3A2A1A6), Modulator Subassembly (A1A1)

(1) ILLUSTRATION (a) FIG NO.	(b) ITEM NO	(2) SMR CODE	(3) NATIONAL STOCK NUMBER	(4) PART NUMBER	(5) FSCM	(6) DESCRIPTION USABLE ON CODE	(7) U/M	(8) QTY INC IN UNIT
34	11	XB022		4628	09922	CONNECTOR,RCPT,ELEC.....	EA	1

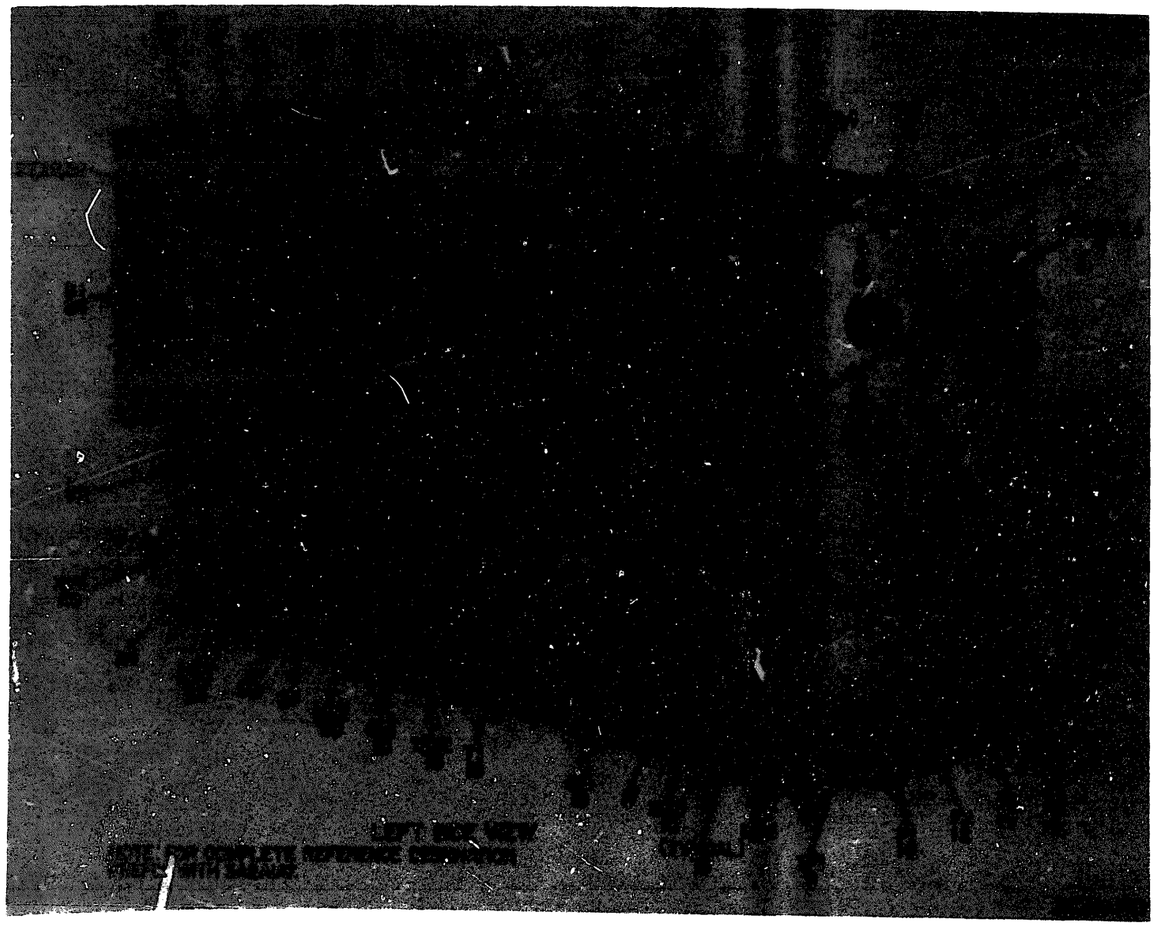

Figure 35. Power Supply (686A) (3A2A1A7).

(1) ILLUSTRATION (a) FIG NO	(b) ITEM NO	(2) SMR CODE	(3) NATIONAL STOCK NUMBER	(4) PART NUMBER	(5) FSCM	(6) DESCRIPTION USABLE ON CODE	(7) U/M	(8) QTY INC IN UNIT
						GROUP 02020107 POWER SUPPLY (3A2A1A7)		
35	9	PAOZZ	5920-00-280-4181	312-250	75915	FUSE;CARTRIDGE.....	EA	1
35	10	XDOZZ		MDL2-1 2AMP	71400	FUSE;CARTRIDGE.....	EA	1
35	11	PAOZZ	5920-00-255-8222	MDL10	71400	FUSE;CARTRIDGE.....	EA	1
35	12	PAOZZ	5920-00-142-7375	MDL8	71400	FUSE;CARTRIDGE.....	EA	2

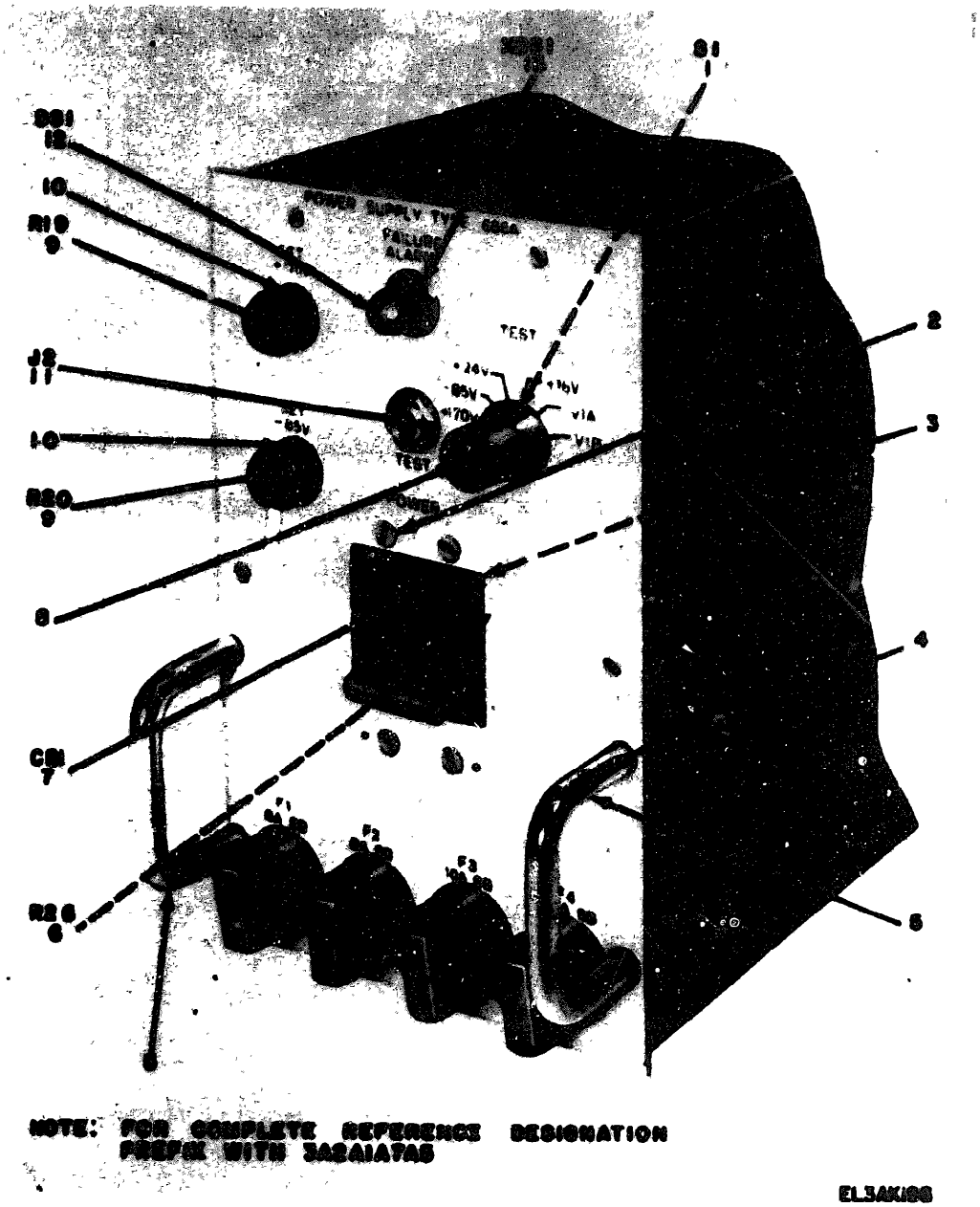

Figure 36. Power Supply (686A) (3A2A2A7), Power Supply Subassembly (A5)

(1) ILLUSTRATION (a) FIG NO	(b) ITEM NO	(2) SMR CODE	(3) NATIONAL STOCK NUMBER	(4) PART NUMBER	(5) FSCM	(6) DESCRIPTION USABLE ON CODE	(7) U/M	(8) QTY INC IN UNIT
36	12	PAU44	6240-00-723-3378	MS2525209A	96906	LAMP,GLOW.....	EA	1

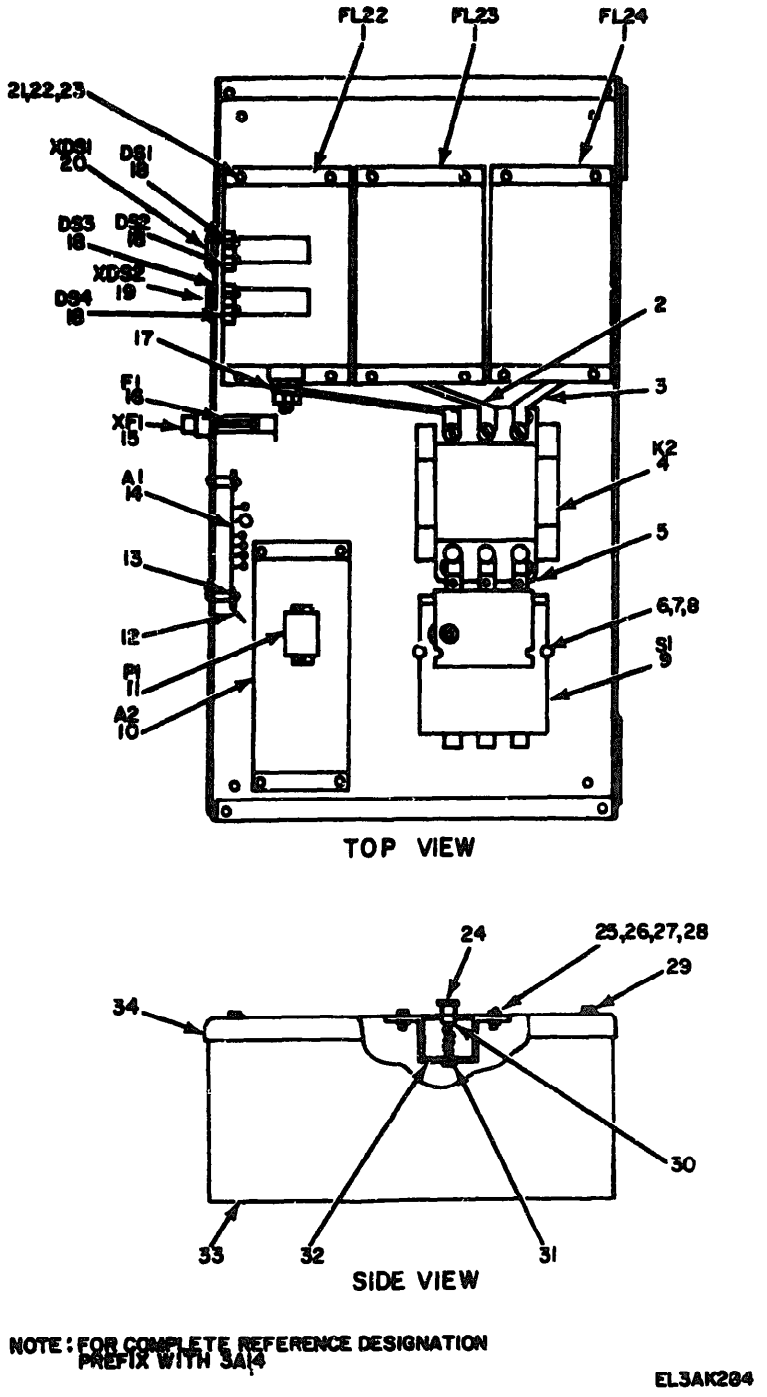

Figure 37. Power Protector Box (3A14)

(1) ILLUSTRATION (a) FIG NO	(b) ITEM NO	(2) SMR CODE	(3) NATIONAL STOCK NUMBER	(4) PART NUMBER	(5) FSCM	(6) DESCRIPTION USABLE ON CODE	(7) U/M	(8) QTY INC IN UNIT
						GROUP 0207 POWER PROTECTOR BOX (3A14)		
37	16	XDOZZ		MDL1-2AMP	71400	FUSE,CARTRIDGE	EA	1
37	18	PFUZZ	6240-00-155-7836	MS25237-327	96906	LAMP,INCANDESCENT	EA	4

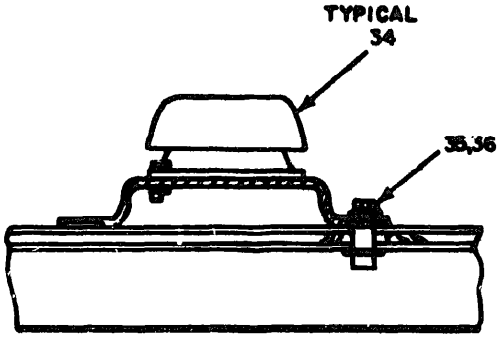

SHOCKMOUNT INSTALLATION IA26

EL3AK298

Figure 38. Message Center OA-3986/TSC-26(1)

GROUP 03 MESSAGE CENTER OA-3988A/TSC-26(1)

(1) ILLUSTRATION (a) FIG NO.	(1) ILLUSTRATION (b) ITEM NO.	(2) SMR CODE	(3) NATIONAL STOCK NUMBER	(4) PART NUMBER	(5) USCM	(6) DESCRIPTION USABLE ON CODE	(7) U/M
38	4	XDOFD		SHU625274-1	97963	HALEWAY	EA

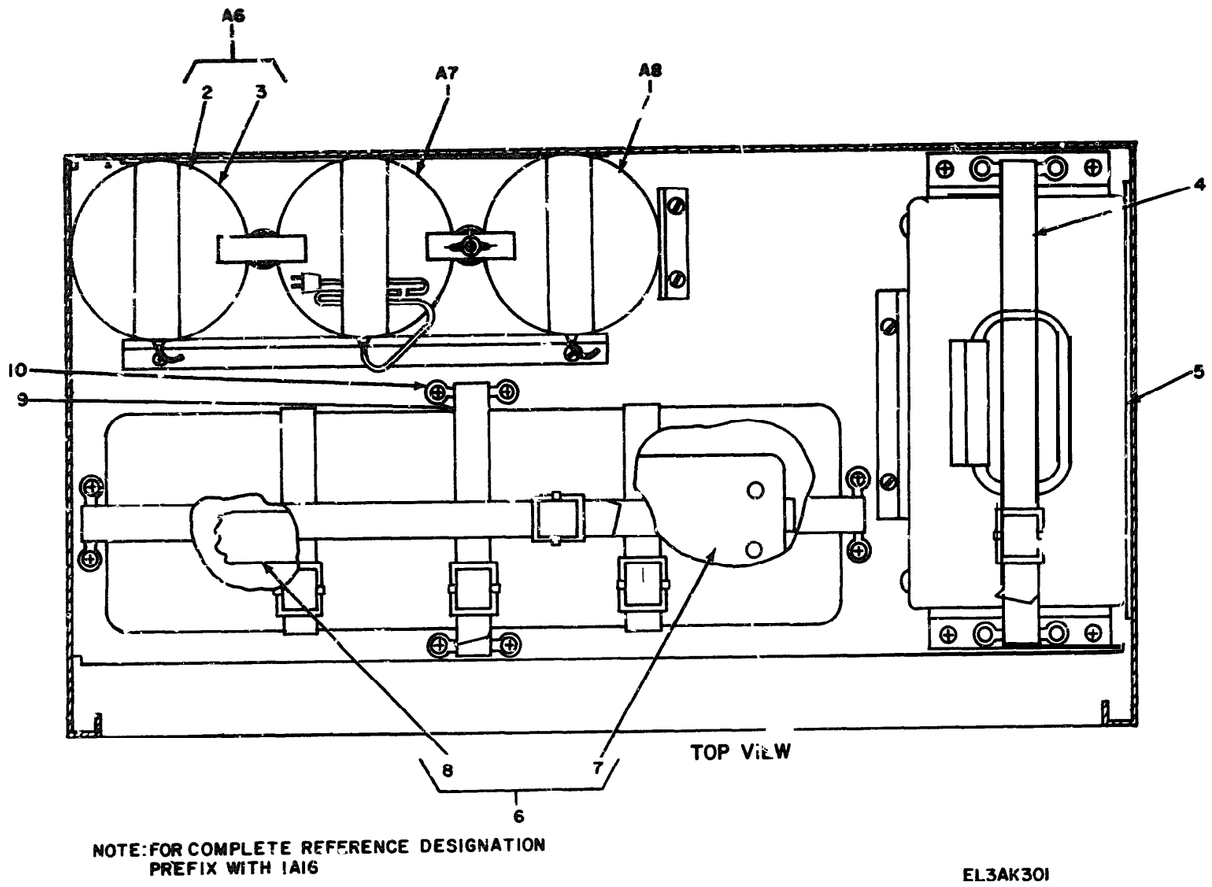

Figure 39. Message Center OA-3986/TSC-26(1), Cabinet Installation (A16)

(1) ILLUSTRATION (a) FIG. NO.	(1) ILLUSTRATION (b) ITEM NO.	(2) SMR CODE	(3) NATIONAL STOCK NUMBER	(4) PART NUMBER	(5) FSCM	(6) DESCRIPTION USABLE ON CODE	(7) U/M	(8) QTY INC IN UNIT
1	6	XDOOO		SMD538250-1	97983	BAG ASSEMBLY,VACUUM	EA	1
39	7	PAOZZ	2920-00-985-9474	N/I	24453	CLEANER,VACUUM,ELEC	EA	1
39	8	XDOZZ		SMD538240-1	97983	BAG,VACUUM CLEANER	EA	1
39	12	XDOZZ		300-130FT	97983	MAGAZINE,SOUND	EA	1
39	24	PAOFF	5965-00-921-0522	107890	97983	HEADSET,ELECTRICAL	EA	4

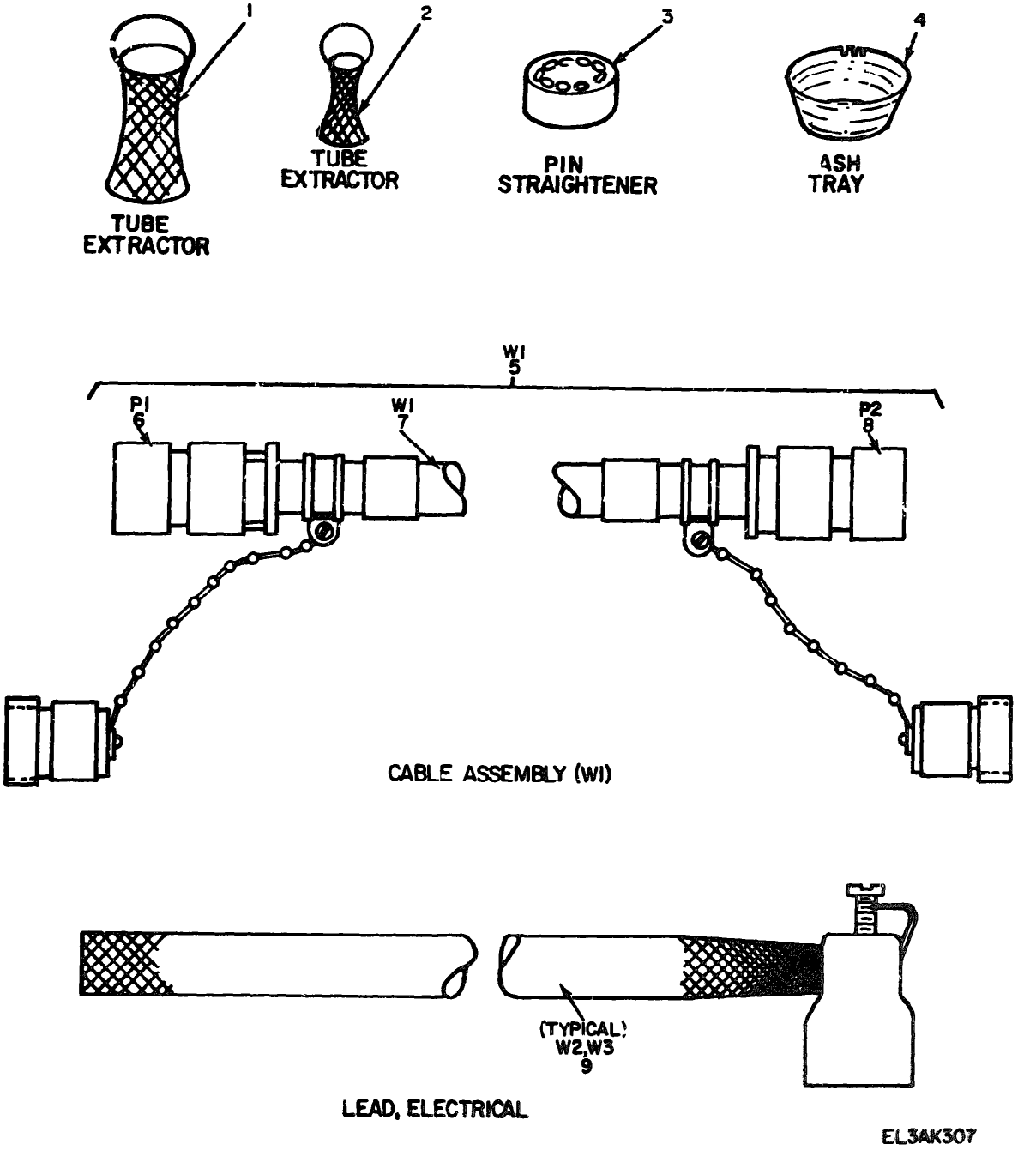

Figure 40. Message Center OA-3986/TSC-26(1),Cabinet Installation (A16) Miscellaneous Parts

(1) ILLUSTRATION (a) FIG. NO.	(b) ITEM NO.	(2) SMR CODE	(3) NATIONAL STOCK NUMBER	(4) PART NUMBER	(5) FSCM	(6) DESCRIPTION USABLE ON CODE	(7) U/M	(8) QTY INC IN UNIT
40	1	PAOZZ	5120-00-504-8504	9113	95344	EXTRACTOR,ELECTRON.....	EA	1
40	2	XBOZZ		7113	97983	EXTRACTOR,ELEK.TUBE.....	EA	1
40	3	XBOZZ		9092	72655	PINSTRAIGHTENER.....	EA	1
40	4	XBOZZ		SMAS37399-1	97983	ASH TRAY.....	EA	3

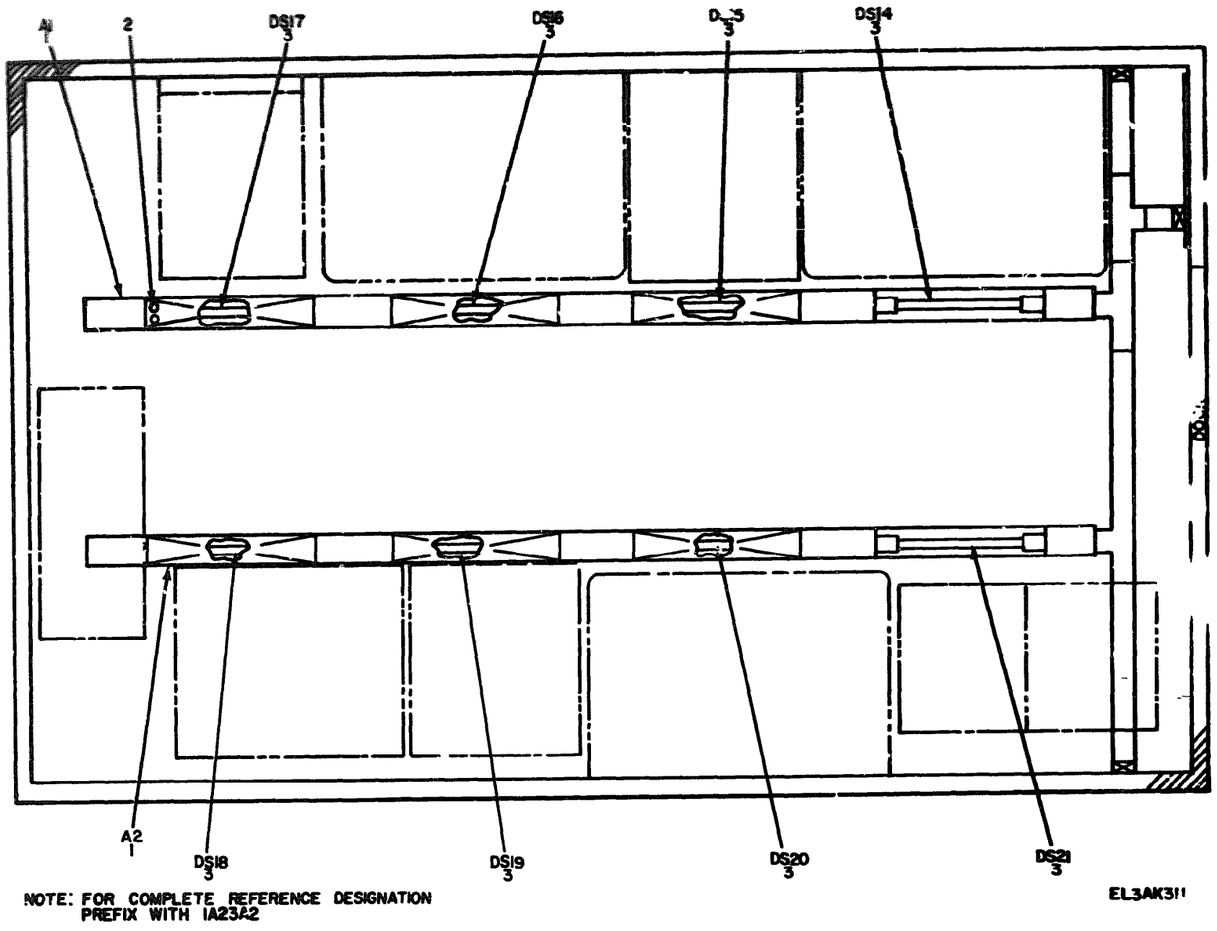

Figure 41. Message Center OA-3986/TSC-26(1) Raceway Installation (A23A2), Tile-Light Fixture Installation

(1) ILLUSTRATION (a) FIG. NO.	(b) ITEM NO.	(2) SMR CODE	(3) NATIONAL STOCK NUMBER	(4) PART NUMBER	(5) FSCM	(6) DESCRIPTION USABLE ON CODE	(7) U/M	(8) QTY INC IN UNIT
41	2	XDOZZ		F20T12CW	97983	LAMP,FLUORESCENT.....	EA	6

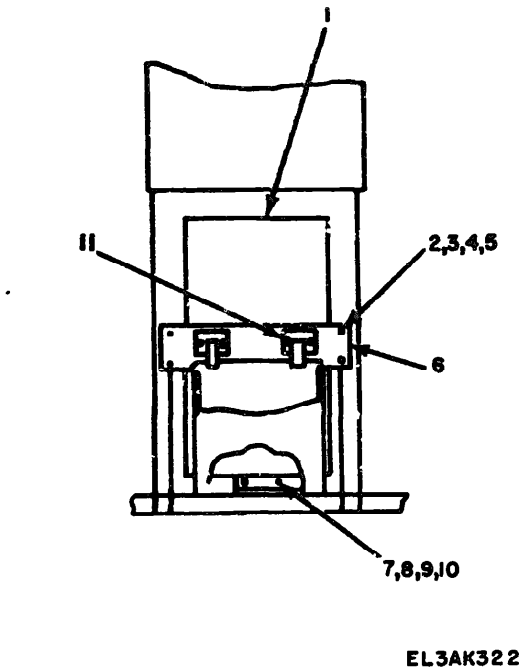

Figure *42. Message Center OA-3986/TSC-26(1), Basket Wastepaper Installation (A15)*

(1) ILLUSTRATION (a) FIG. NO.	(b) ITEM NO.	(2) SMR CODE	(3) NATIONAL STOCK NUMBER	(4) PART NUMBER	(5) FSCM	(6) DESCRIPTION USABLE ON CODE	(7) U/M	(8) QTY INC IN UNIT
42	1	XDGZZ		FEDSTD88181	81348	BASKET,WASTEPAPER.....	EA	1

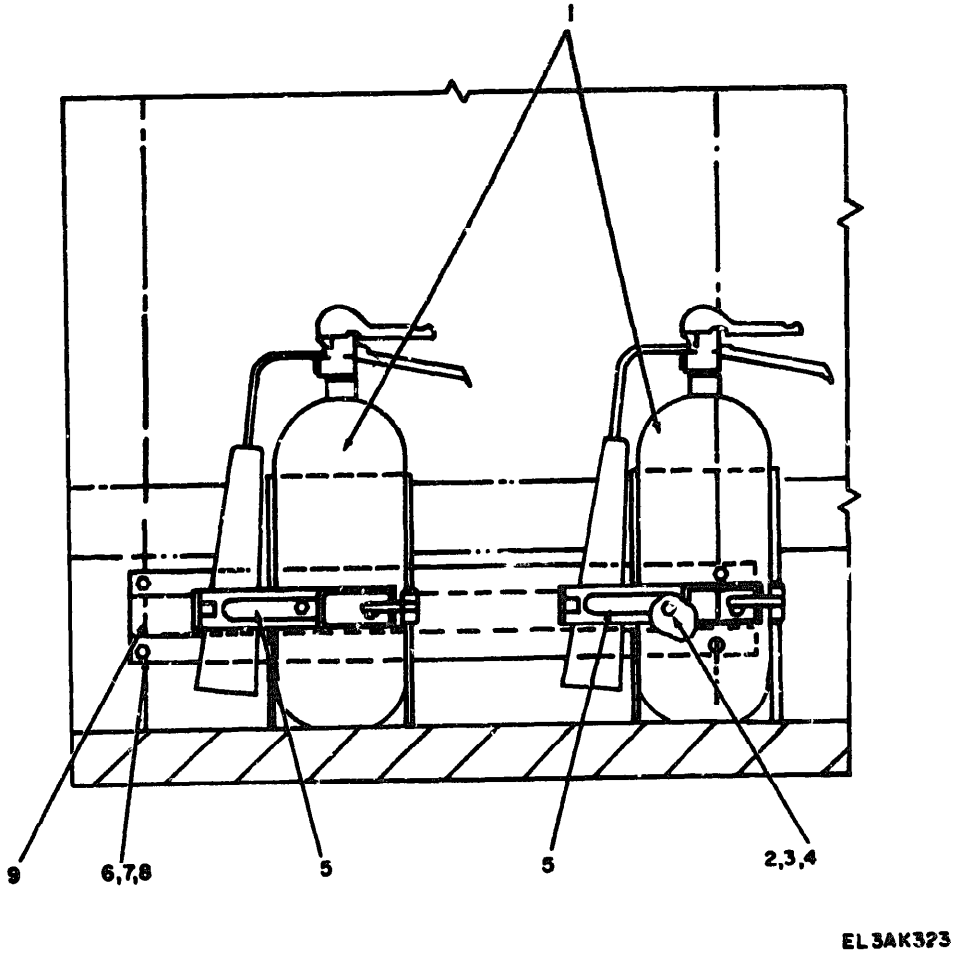

Figure 43. Message Center OA-3986/TSC-26(1), Fire Extinguisher Installation (A20)

(1) ILLUSTRATION (a) FIG. NO.	(b) ITEM NO.	(2) SMR CODE	(3) NATIONAL STOCK NUMBER	(4) PART NUMBER	(5) FSCM	(6) DESCRIPTION USABLE ON CODE	(7) U/M	(8) QTY INC IN UNIT
43	1	XBOZZ		MIL6468TYPE1CL1	81349	FIRE EXTINGUISHER	EA	2

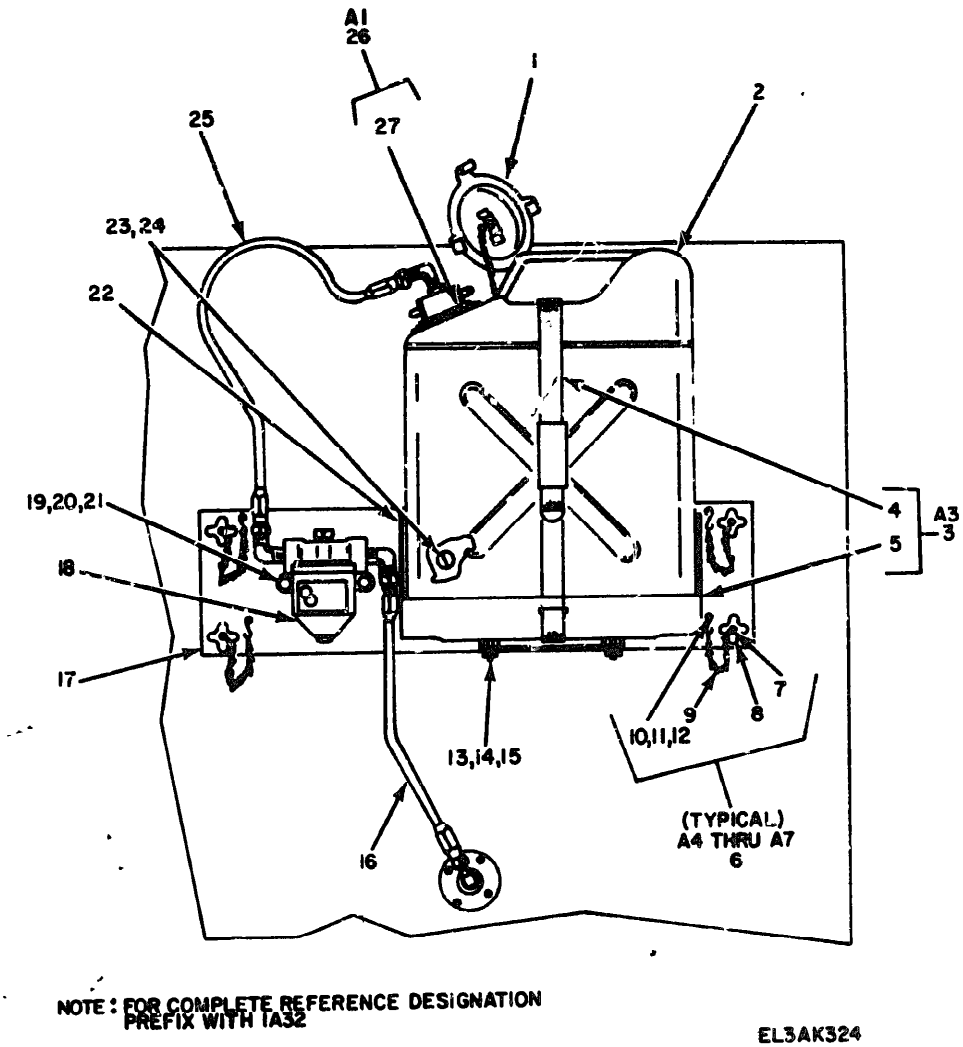

Figure 44. Message Center OA-3986/TSC-26(1), Fuel Can Installation (A32)

(1) ILLUSTRATION FIG. NO.	(2) ITEM NO.	(3) SMR CODE	(4) NATIONAL STOCK NUMBER	(5) PART NUMBER	(6) FSCM	(8) DESCRIPTION USABLE ON CODE	(7) UOM	(9) QTY INC IN UNIT
44	2	XB022		SMC625323-1	97983	CAN,GASOLINE	EA	1

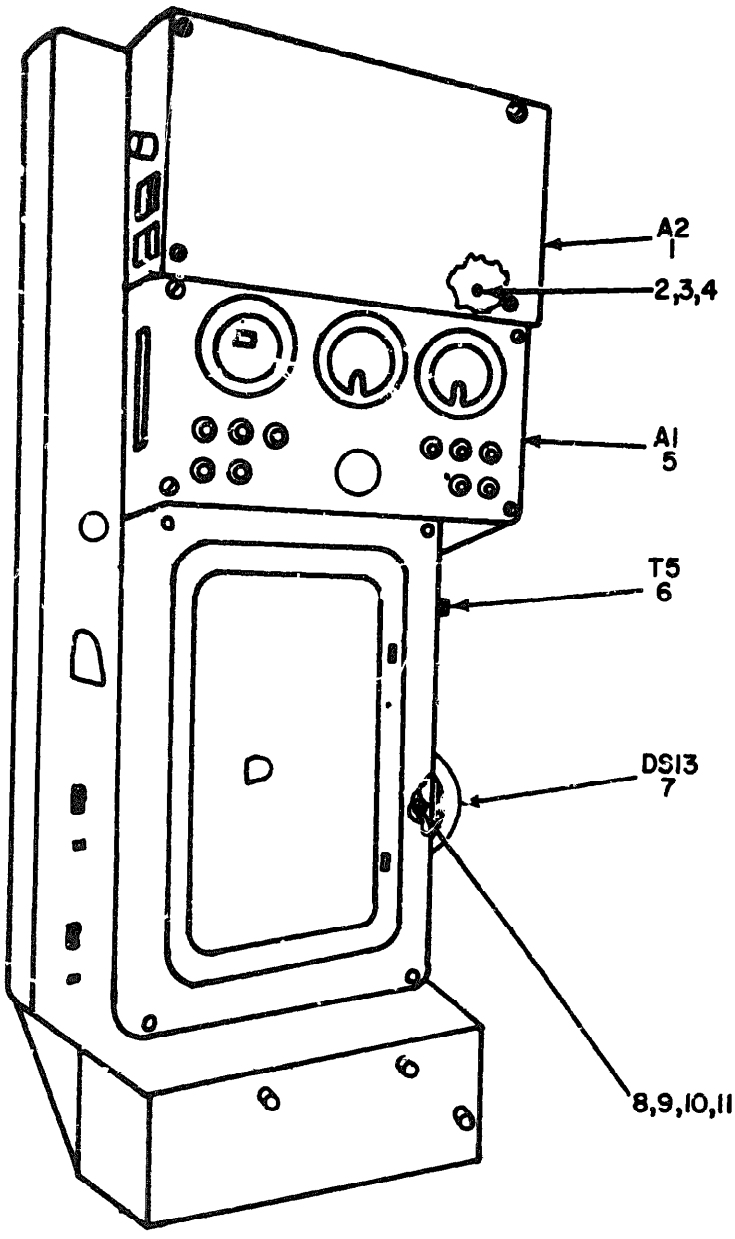

FRONT VIEW

NOTE: FOR COMPLETE REFERENCE DESIGNATION PREFIX WITH 1A1

EL3AK325

Figure 45. Distribution Box (1A1)

(1) ILLUSTRATION (a) FIG NO	(b) ITEM NO	(2) SMR CODE	(3) NATIONAL STOCK NUMBER	(4) PART NUMBER	(5) FSCM	(6) DESCRIPTION USABLE ON CODE	(7) U/M	(8) QTY INC IN UNIT
						GROUP 0301 DISTRIBUTION BOX (1A1)		
45	4	PAOFD	6110-00-112-8790	SMD53b443-1	97983	PROTECTOR,PLATE.....	EA	1
45	5	XDOFD		SMD537871-1	97983	PANEL,INDICATOR.....	EA	1

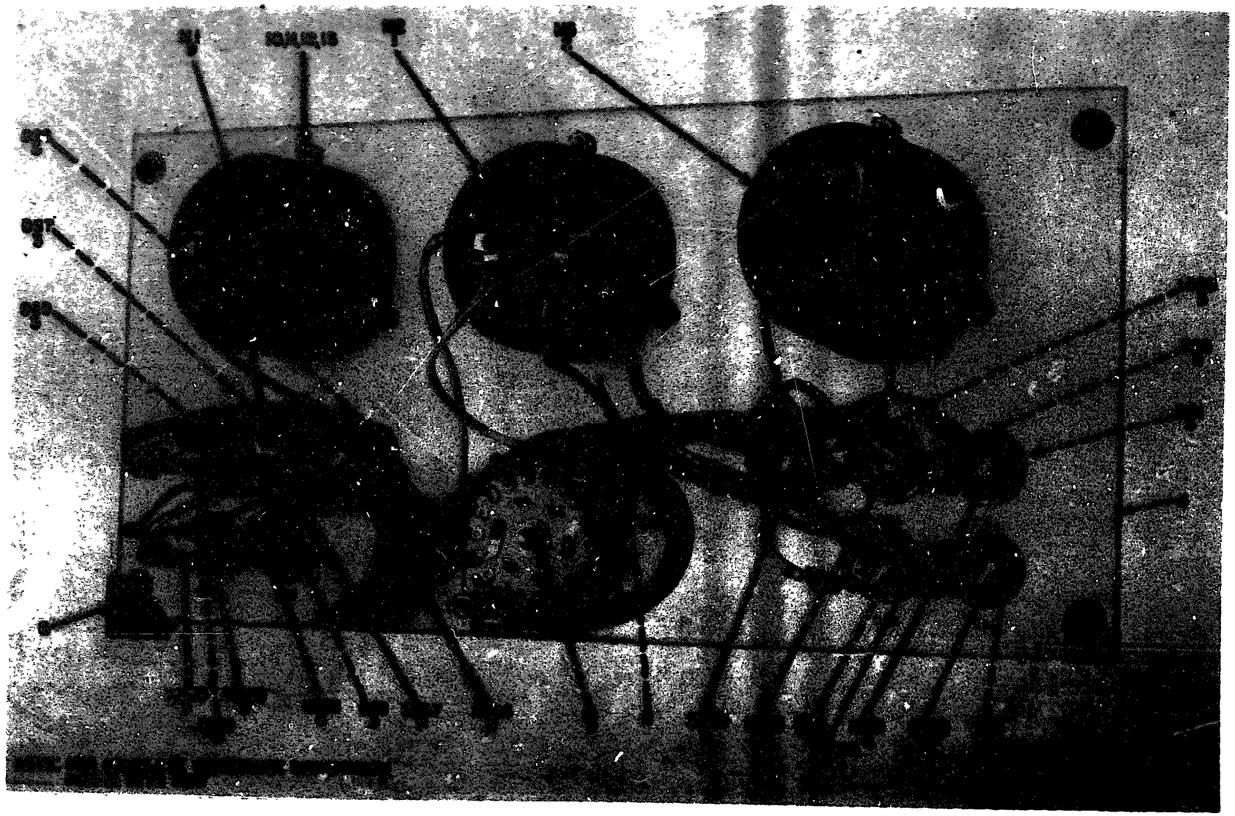

Figure 46. Panel Indicator (1A1A1)

(1) ILLUSTRATION (a) FIG. NO.	(b) ITEM NO.	(2) SMR CODE	(3) NATIONAL STOCK NUMBER	(4) PART NUMBER	(5) FSCM	(6) DESCRIPTION USABLE ON CODE	(7) U/M	(8) QTY INC IN UNIT
						GROUP 030101 PANEL INDICATOR (1A1A1)		
46	3	XBOZZ		NE51	81349	LAMP,GLOW.....	EA	10

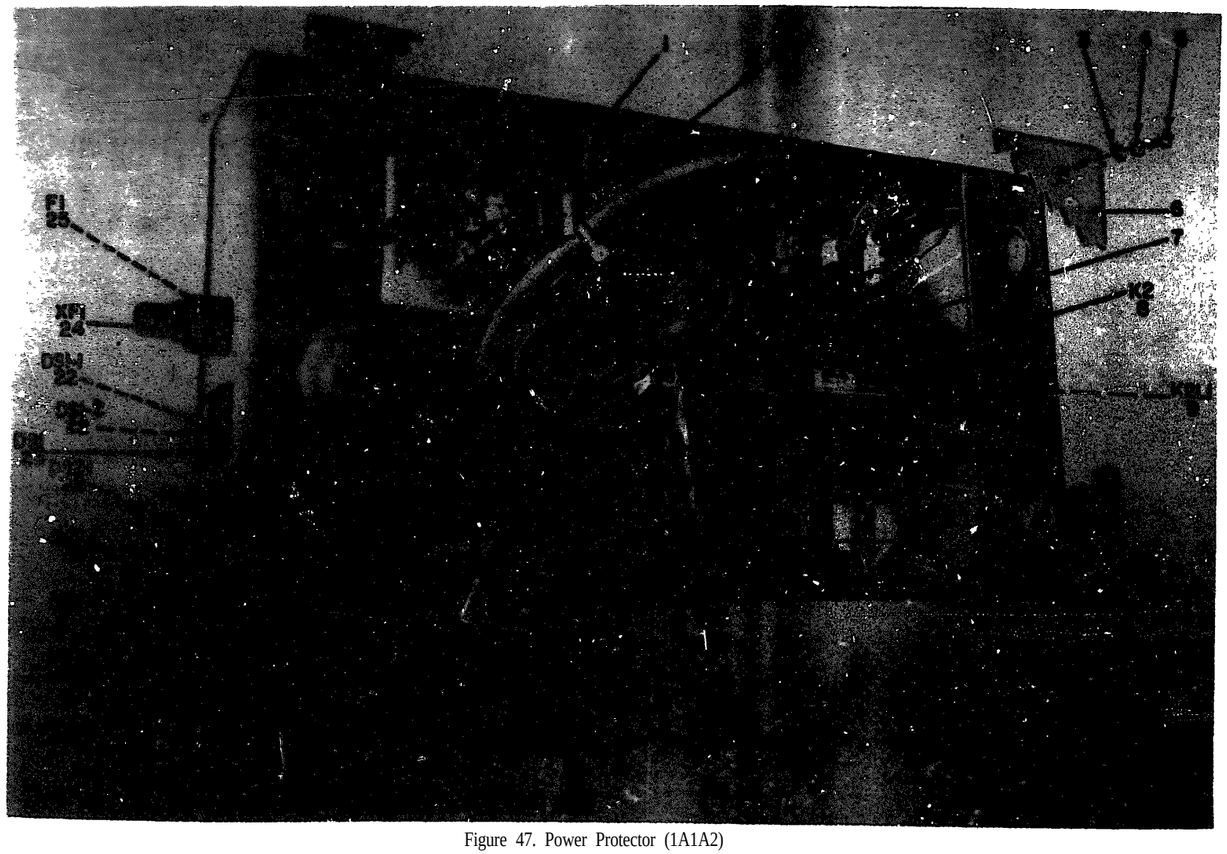

Figure 47. Power Protector (1A1A2)

(1) ILLUSTRATION (a) FIG. NO.	(1) ILLUSTRATION (b) ITEM NO.	(2) SMR CODE	(3) NATIONAL STOCK NUMBER	(4) PART NUMBER	(5) FSCM	(6) DESCRIPTION USABLE ON CODE	(7) U/M	(8) QTY INC IN UNIT
						GROUP -030102- POWER -PROTECTOR- (1A1A2)		
47	22	PAUZZ	6240-00-155-7836	MS25237-327	96906	LAMP,INCANDESCENT.....	EA	4
47	25	XBOZZ		MDL2-2AMP	71400	FUSE,CARTRIDGE.....	EA	1

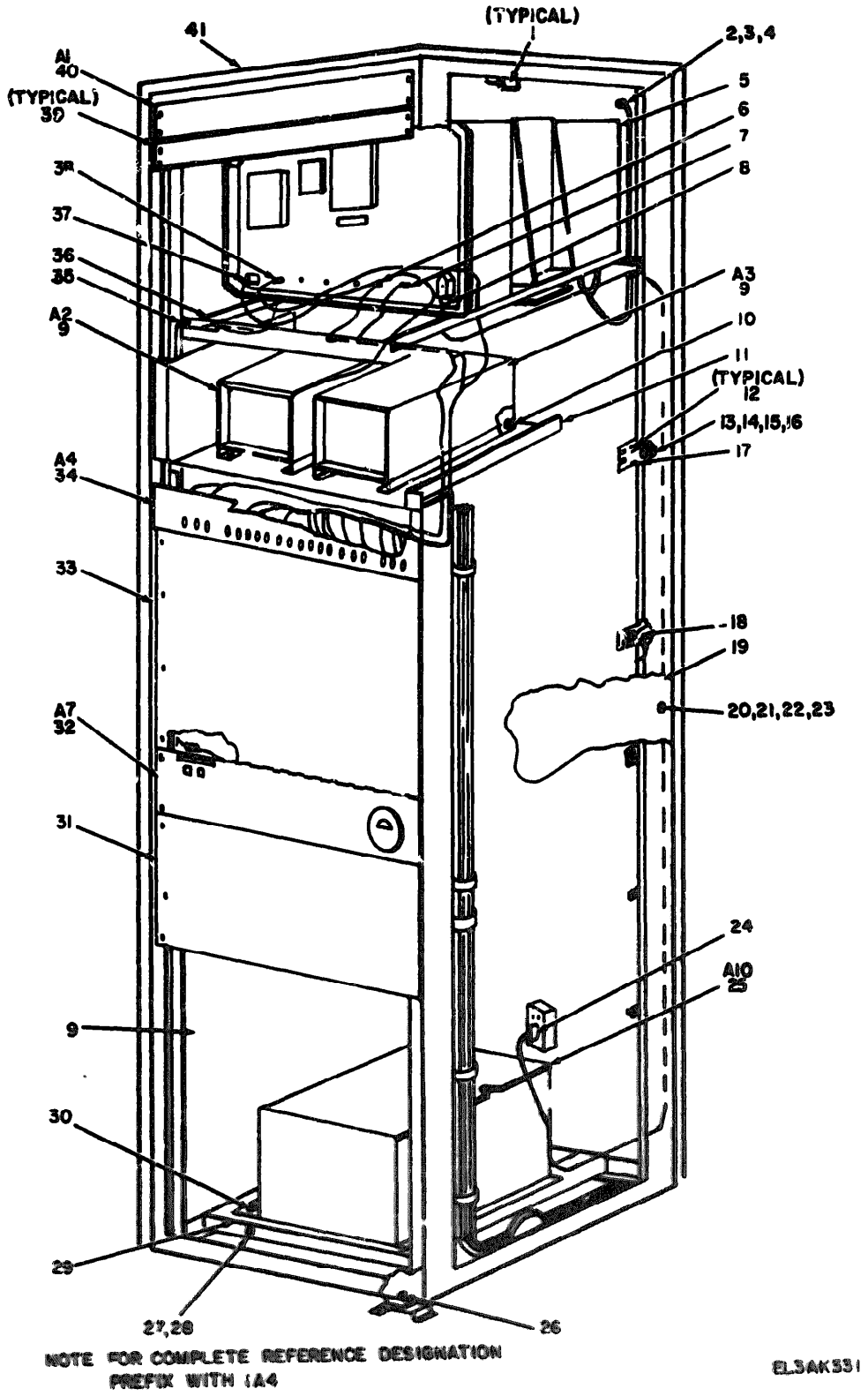

Figure 48. Recover Group (1A1)

(1) ILLUSTRATION (a) FIG. NO.	(1) ILLUSTRATION (b) ITEM NO.	(2) SMR CODE	(3) NATIONAL STOCK NUMBER	(4) PART NUMBER	(5) FSCM	(6) DESCRIPTION USABLE ON CODE	(7) U/M	(8) QTY INC IN UNIT
						GROUP 0302 RECEIVER GROUP (1A4)		
46	34	XBOBB		SM0537763-1	97983	PANEL WATCHIN.....	EA	1

Figure 49. Communication Patching Panel (1A4A4).

(1) ILLUSTRATION (a) FIG. NO.	(b) ITEM NO.	(2) SMR CODE	(3) NATIONAL STOCK NUMBER	(4) PART NUMBER	(5) FSCM	(6) DESCRIPTION USABLE ON CODE	(7) U/M	(8) QTY INC IN UNIT
						GROUP 030203 COMMUNICATION PATCHING PANEL (1A4A4)		
49	2	XDOZZ	5935-00-837-5969	PJ051A	97983	PLUG,TELEPHONE	EA	2
49	3	XDOZZ		22AWGCOPINSPLAS3 6GATWUCOPBRDSHLD	73674	CABLE TELEPHONE	EA	1
49	4	PAUZZ	5905-00-299-2060	RC32GF200J	81349	RESISTOR,FIXED,COMP	EA	2
49	10	XDOZZ		585-03	97983	LENS,INDICATOR	EA	1
49	12	PAOZZ	6240-00-155-7857	MS25237-328	97983	LAMP,INCANDESCENT	EA	2
49	13	PAOZZ	6240-00-155-7857	MS25237-328	96906	LAMP,INCANDESCENT	EA	2
49	14	PAOZZ	5935-00-192-4825	JJ022	81349	JACK,TELEPHONE	EA	1
49	15	PAOZZ	5305-00-054-6653	MS51957-29	96906	SCREW,MACHINE	EA	12
49	16	PAOZZ	5310-00-929-6395	MS35337-79	96906	WASHER,LOCK	EA	12
49	17	PAOZZ	5935-00-194-3079	JJ042	81349	JACK,TELEPHONE	EA	11
49	18	XDOZZ		SMD537879-5	97983	STRIP,DESIGNATIN	EA	1
49	19	PAOZZ	5340-00-782-1168	PJ29	97983	BUTTON,PLUG	EA	38
49	20	XDOZZ		SMD537879-4	97983	STRIPDESIGNATIOON	EA	1

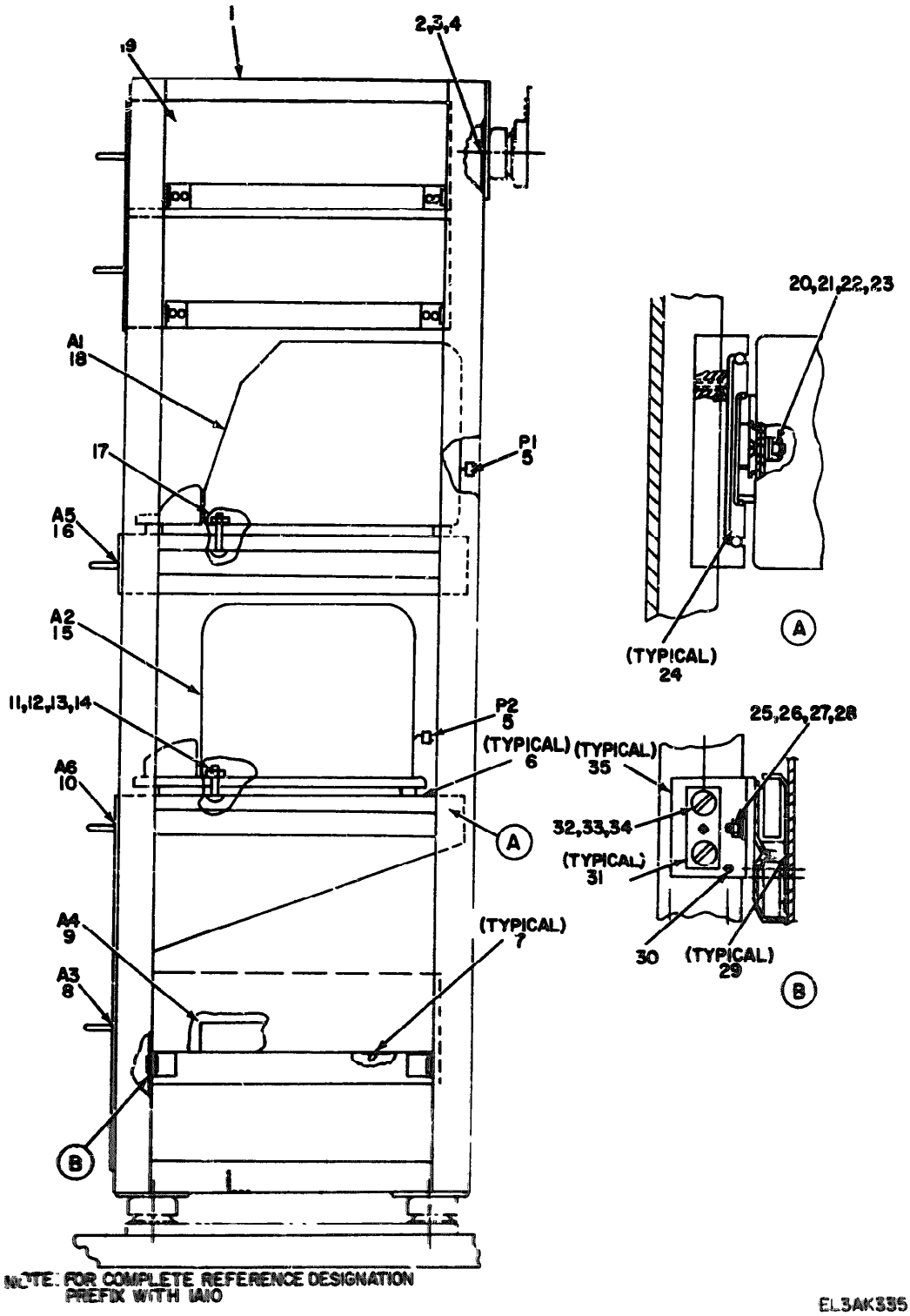

Figure 50 Teletyper Group (1A10)

SECTION II

(1) ILLUSTRATION FIG. NO.	(2) ITEM NO.	(3) SMR CODE	(4) NATIONAL STOCK NUMBER	(5) PART NUMBER	(6) FSCM	(7) DESCRIPTION USABLE ON CODE	(8) UOM	(9) QTY INCL IN UNIT
						GROUP 0305 TELETYPEWRITTER GROUP (1A10)		
50	1	PAOOO	3815-00-557-5976	AN/UGC-4	80058	TELETYPEWRITER SET	EA	1

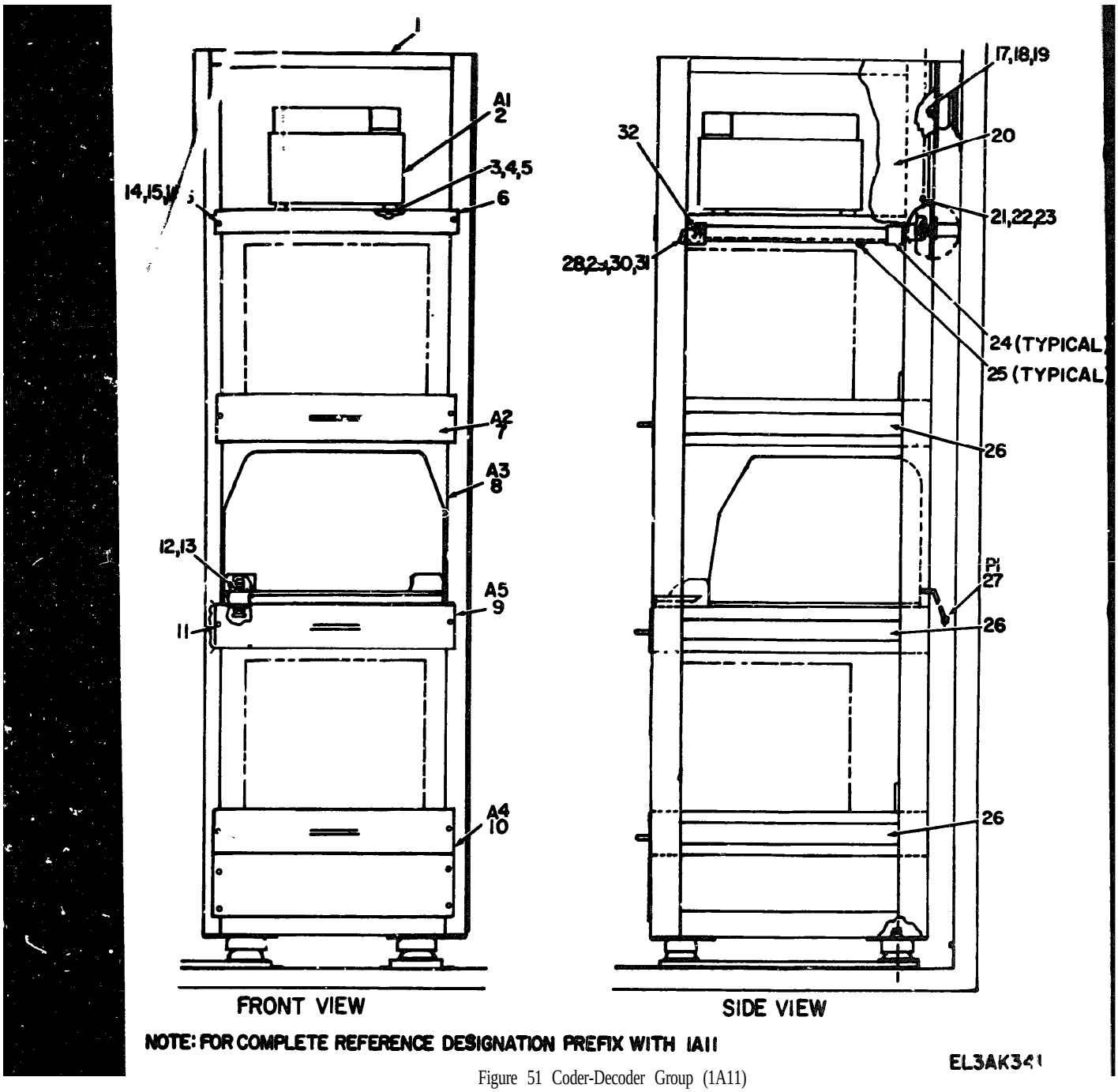

Figure 51 Coder-Decoder Group (1A11)

SECTION II

(1) ILLUSTRATION (a) FIG. NO.	(1) ILLUSTRATION (b) ITEM NO.	(2) SMR CODE	(3) NATIONAL STOCK NUMBER	(4) PART NUMBER	(5) FSCM	(6) DESCRIPTION USABLE ON CODE	U/M	QTY INC IN UNIT
						GROUP 0306 CODER-DECODER GROUP (1A11)		
51	4	X3033		AMUGC4GFP	88058	TELETYPEWRITER SET.....	EA	1

NOTE: LATEST NATIONAL STOCK NUMBER AND [ARTS NUMBER ASSIGNMENTS ARE INCLUDED AT THE END OF INDEX.

STOCK NUMBER	FIGURE NO.	ITEM NO.
5310-00-054-1831	8	13
5305-00-059-3658	8	11
4010-00-104-8918	14	19
5960-00-108-0257	8	40
5905-00-111-4858	11	12
6110-00-112-8796	3	1
6110-00-112-8796	45	1
5960-00-134-9919	22	3
5920-00-142-7375	35	12
5995-00-146-1481	13	11
5950-00-147-0661	10	21
6240-00-155-7836	37	18
6240-00-155-7836	47	22
6240-00-155-7857	20	3
6240-00-155-7857	49	12
6240-00-155-7857	49	13
6240-00-179-1816	2	5
5935-00-192-4825	49	14
5935-00-194-3079	49	17
5905-00-195-6809	11	5
5905-00-195-6817	11	7
6240-00-223-9100	4	4
6240-00-223-9100	18	3
5920-00-235-8362	16	13
5920-00-255-6222	35	11
5960-00-261-8679	30	40
6210-00-270-8810	8	14
5960-00-272-9182	8	7
5310-00-275-0586	7	26
5905-00-279-3833	11	4
5920-00-280-4181	35	5
5920-00-280-8345	20	12
5920-00-280-8344	20	14
5920-00-281-0224	16	14
5905-00-299-2060	49	4
5920-00-356-2199	23	6
5920-00-480-1228	20	13
5120-00-508-0584	40	1
5935-00-517-9453	10	17
5960-00-543-1720	8	22
5355-00-552-1610	20	20
5815-00-557-5970	50	18
5355-00-579-1210	18	9
5920-00-581-4144	10	8
5310-00-595-6057	6	9
5310-00-619-1148	8	12
5999-00-636-5928	11	1
5305-00-637-0653	9	8
6240-00-723-3378	20	17
6240-00-723-3378	23	24
6240-00-723-3378	36	12
5915-00-760-6999	26	7
5340-00-761-1258	16	23
5961-00-762-2682	11	6
5310-00-773-7618	7	25
5340-00-782-1168	49	19
5935-00-830-6349	10	20
5935-00-837-5969	49	2
5960-00-878-5078	21	16
5935-00-890-4287	14	11
5920-00-892-9311	16	12
7910-00-905-9474	39	7
5965-00-921-0522	39	26
5935-00-925-9145	11	9
5310-00-929-6395	49	16
5920-00-937-3713	23	16
5905-00-942-9326	11	13
5945-00-945-0032	10	18
5935-00-947-3278	8	18
5895-00-949-7426	15	15
5340-00-954-3134	8	15
5961-00-986-7516	10	15

PART NUMBER	FSCM	FIG. NO.	ITEM NO.
AN/UGL-4	80058	50	18
ANUGC4GFP	80058	51	8
C-6758/TSC-26	80058	14	47
DM15-181J	72136	27	3
C87ODCA85000HM	79727	11	11
FEDSTDRB8181	81348	42	1
FHN20C	81349	10	7
FI2A25OV1-2AS	81349	16	14
FO2A25OV12A5	81349	20	14
F20T12CW	97983	41	3
HC69	13327	11	6
HKPEKLQRWZ	71400	16	12
JJ022	81349	49	14
JJ042	81349	49	17
MDL1-16AMP	71400	23	7
MSL1-2AMP	71400	37	16
MDL1-2AMP	71400	47	25
MSL1AMP	71400	10	10
MDL10	71400	35	11
MDL2-1 2AMP	71400	35	10
MDL3-8AMP	71400	23	16
MDL8	71400	35	12
MDX2AMP	71400	10	8
MF10	97983	5	9
MILE468TYPE1CL1	81349	43	1
MRO1-20-18S7	71468	14	10
MRO6-20-18P7	71468	14	11
MS15795-308	96906	8	12
MS15795-814	96906	7	25
MS15795-815	97983	6	9
MS25237-327	96906	37	18
MS25237-327	96906	47	22
MS25237-328	96906	20	3
MS25237-328	96906	49	13
MS25237-328	97983	49	12
MS25252C9A	96906	20	17
MS2525209A	96906	23	14
MS2525207A	96906	31	1
MS2525209A	96906	36	12
MS25261-7	96906	8	15
MS35233-14	96906	9	8
MS35234-62	96906	8	11
MS35307-64	97983	7	24
MS35307-65	96906	6	8
MS35337-79	96906	49	16
MS35338-81	96906	8	13
MS35338-84	96906	7	26
MS35650-104	96906	8	14
MS39087-6	96906	16	23
MS91528-1K18	96906	20	20
MS91528-3F28	96906	18	9
MV1	24453	39	7
M1-8T11000P	12126	32	2
NE30	81349	2	5
NE51	81349	4	4
NE51	81349	18	3
NE51	81349	46	3
NE51H	81349	16	10
NO6STL0ADPLINT	70318	10	14
NO8STL0DPLEXT	70318	10	3
P J 0 5 1 R	97983	49	2
PJ29	97983	49	19
RC20GF100K	81349	11	4
RC20GF102K	81349	11	7
RC20GF122K	81349	11	5
RC20GF471K	81349	11	12
RC20GF561K	81349	11	13
RC32GF200J	81349	49	4
SMBS37399-1	97983	40	4
SMB538065-1	97983	7	15
SMB538066-1	97983	6	12
SMB538250-1	97983	39	6
SMC537690-7	97983	13	1
SMC537892-1	97983	12	24
SMC537922-1	97983	8	16
SMC537957-1	97983	1	23
SMC538374-1	97983	7	4

PART NUMBER	FSCM	FIG. NO.	ITEM NO.
SMC538374-2	97983	7	9
SMC625323-1	97983	44	2
SMC537763-1	97983	48	34
SMC537871-1	97983	45	5
SMD537679-4	97983	49	20
SMD537879-5	97983	49	18
SMD537929-1	97983	7	27
SMD537962-1	97983	3	2
SMD538041-1	97983	17	1
SMD538249-1	97983	39	8
SMD5388443-1	97983	3	1
SMD536443-1	97983	45	1
SMD625374-1	97983	38	9
S03-16	74016	8	17
T154X179	02266	10	18
021-11-07-43-00	97983	33	15
05-3305	91662	11	9
IN30178	81349	11	14
1042A	18708	10	9
1044A	18708	10	19
107890	97983	39	26
1116A	18708	10	17
116582	18708	10	21
12088	18708	11	2
121004	75915	11	1
1464B	18708	10	16
2-56STLLDPL	70318	10	5
2N1487	81349	10	15
2N2102	81349	11	8
2102-04	97983	28	23
22AWGCDP1NS36GATNDCOPBRDSHLD	70674	49	3
300-00-05-60	97983	28	22
300-130FT	97983	39	12
30003-401A1-2	97983	19	1
30003-40201-1	97983	28	15
30003-404C1-1	97983	28	21
30055-1	02268	10	20
312-250	75915	35	5
312001	75915	20	12

PART NUMBER	FSCM	FIG. NO.	ITEM NO.
312003	75915	23	6
312004	75915	20	13
313-300	95915	16	13
32148	18708	10	12
391-22-00-31	97983	24	3
391-22-00-59	97983	32	3
391-46-50-00	97983	19	3
397-22-11-01	97983	26	7
4176-3-0519	97983	32	5
4628	09922	34	11
4720	74545	8	18
505AV25	22003	5	4
515653886001	95104	14	24
515-5165-002	95104	15	15
515-5270-001	95104	14	19
515-5290-001	95104	14	15
515-5338-001	95104	14	26
515-5342-003	95104	14	9
5726	81349	21	18
5840	81349	25	13
5840	81349	29	28
5840	81349	30	41
5840	97983	27	25
585-03	97983	49	10
6-32STLNIPL	70318	10	13
6AL5	80131	22	3
6AQ5A	80131	8	22
6X4WA	81349	8	7
6021	81349	30	40
61480	82877	13	11
6184-1A	91506	9	7
7113	97983	40	2
765-9005-001	95104	14	48
764-9012-001	95104	16	3
8-32X1STLCDPLBDH	70318	10	2
884	81349	8	40
9092	72655	40	3
9113	95344	40	1
925M3	91459	10	6

LATEST NATIONAL STOCK NUMBER ASSIGNMENTS

STOCK NUMBER	FIG. NO.	ITEM NO.
5305-00-054-6653	49	15

LATEST PART NUMBER ASSIGNMENTS

PART NUMBER	FSCM	FIG. NO.	ITEM NO.
MS51957-29	96906	49	15

RECOMMENDED CHANGES TO EQUIPMENT TECHNICAL MANUALS

SOMETHING WRONG WITH THIS MANUAL?

THEN. . .JOT DOWN THE DOPE ABOUT IT ON THIS FORM, TEAR IT OUT, FOLD IT AND DROP IT IN THE MAIL!

FROM: (YOUR UNIT'S COMPLETE ADDRESS)
Commander
Stateside Army Depot
ATTN: AMSTA-US
Stateside, N.J. 07703

DATE 10 July 1975

PUBLICATION NUMBER	DATE	TITLE
TM 11-5840-340-20P	23 Jan 78	Radar Set AN/PRC-76

BE EXACT. . .PIN-POINT WHERE IT IS

PAGE NO.	PARA-GRAPH	FIGURE NO.	TABLE NO.	IN THIS SPACE TELL WHAT IS WRONG AND WHAT SHOULD BE DONE ABOUT IT:
33				For item 2, change the NSN to read: 5835-00-134-9186. Reason: Accuracy.
44		19		Identify the cover on the junction box (item no. 5). Reason: It is a separate item and is not called out on figure 19.
45				Add the cover of the junction box as an item in the listing for figure 19. Reason: Same as above.

TYPED NAME, GRADE OR TITLE, AND TELEPHONE NUMBER
SSG I. M. DeSpiritof 999-1776

SIGN HERE: SSG I. M. DeSpiritof

DA FORM 1 AUG 74 2028-2

P.S.--IF YOUR OUTFIT WANTS TO KNOW ABOUT YOUR MANUAL "BIND," MAKE A CARBON COPY OF THIS AND GIVE IT TO YOUR HEADQUARTERS.

TEAR ALONG DOTTED LINE

SAMPLE

RECOMMENDED CHANGES TO EQUIPMENT TECHNICAL MANUALS

SOMETHING WRONG WITH THIS MANUAL?

THEN. . .JOT DOWN THE DOPE ABOUT IT ON THIS FORM. TEAR IT OUT, FOLD IT AND DROP IT IN THE MAIL!

FROM: (YOUR UNIT'S COMPLETE ADDRESS)

DATE

PUBLICATION NUMBER	DATE	TITLE
TM 11-5895-482-20P	9 Oct 79	Communications Central AN/TSC-26

BE EXACT. . .PIN-POINT WHERE IT IS

PAGE NO.	PARA-GRAPH	FIGURE NO.	TABLE NO.	IN THIS SPACE TELL WHAT IS WRONG AND WHAT SHOULD BE DONE ABOUT IT:

TYPED NAME, GRADE OR TITLE AND TELEPHONE NUMBER

SIGN HERE:

DA FORM 1 AUG 74 2028-2

P.S.—IF YOUR OUTFIT WANTS TO KNOW ABOUT YOUR MANUAL "FIND," MAKE A CARBON COPY OF THIS AND GIVE IT TO YOUR HEADQUARTERS.

TEAR ALONG DOTTED LINE

FILL IN YOUR UNIT'S ADDRESS

FOLD BACK

DEPARTMENT OF THE ARMY

OFFICIAL BUSINESS

PENALTY FOR PRIVATE USE, $300

POSTAGE AND FEES PAID
DEPARTMENT OF THE ARMY
DOD-314

Commander
US Army Communications and
Electronics Materiel Readiness Command
ATTN: DRSEL-ME-MQ
Fort Monmouth, New Jersey 07703

TEAR ALONG DOTTED LINE

FOLD BACK

REVERSE OF DA FORM 2028-2

RECOMMENDED CHANGES TO EQUIPMENT TECHNICAL MANUALS

SOMETHING WRONG WITH THIS MANUAL?

THEN. . .JOT DOWN THE DOPE ABOUT IT ON THIS FORM, TEAR IT OUT, FOLD IT AND DROP IT IN THE MAIL!

FROM: (YOUR UNIT'S COMPLETE ADDRESS)

DATE

PUBLICATION NUMBER	DATE	TITLE
TM 11-5895-482-20P	9 Oct 79	Communications Central AN/TSC-26

BE EXACT. . .PIN-POINT WHERE IT IS

PAGE NO.	PARA-GRAPH	FIGURE NO.	TABLE NO.

IN THIS SPACE TELL WHAT IS WRONG AND WHAT SHOULD BE DONE ABOUT IT:

TYPED NAME, GRADE OR TITLE AND TELEPHONE NUMBER

SIGN HERE:

DA FORM 1 AUG 74 2028-2

P.S.--IF YOUR OUTFIT WANTS TO KNOW ABOUT YOUR MANUAL "FIND ," MAKE A CARBON COPY OF THIS AND GIVE IT TO YOUR HEADQUARTERS.

TEAR ALONG DOTTED LINE

FILL IN YOUR UNIT'S ADDRESS

FOLD BACK

DEPARTMENT OF THE ARMY

OFFICIAL BUSINESS

PENALTY FOR PRIVATE USE, $300

POSTAGE AND FEES PAID
DEPARTMENT OF THE ARMY
DOD-314

Commander
US Army Communications and
Electronics Materiel Readiness Command
ATTN: DRSEL-ME-MQ
Fort Monmouth, New Jersey 07703

TEAR ALONG DOTTED LINE

FOLD BACK

REVERSE OF DA FORM 2028-2

RECOMMENDED CHANGES TO EQUIPMENT TECHNICAL MANUALS

SOMETHING WRONG WITH THIS MANUAL?

THEN. . .JOT DOWN THE DOPE ABOUT IT ON THIS FORM, TEAR IT OUT, FOLD IT AND DROP IT IN THE MAIL!

FROM: (YOUR UNIT'S COMPLETE ADDRESS)

DATE

PUBLICATION NUMBER	DATE	TITLE
TM 11-5895-482-20P	9 Oct 79	Communications Central AN/TSC-26

BE EXACT. . .PIN-POINT WHERE IT IS

PAGE NO.	PARA-GRAPH	FIGURE NO.	TABLE NO.	IN THIS SPACE TELL WHAT IS WRONG AND WHAT SHOULD BE DONE ABOUT IT:

TYPED NAME, GRADE OR TITLE AND TELEPHONE NUMBER

SIGN HERE:

DA FORM 1 AUG 74 2028-2

P.S.—IF YOUR OUTFIT WANTS TO KNOW ABOUT YOUR MANUAL "FIND," MAKE A CARBON COPY OF THIS AND GIVE IT TO YOUR HEADQUARTERS.

TEAR ALONG DOTTED LINE

FILL IN YOUR UNIT'S ADDRESS

FOLD BACK

DEPARTMENT OF THE ARMY

OFFICIAL BUSINESS

PENALTY FOR PRIVATE USE, $300

POSTAGE AND FEES PAID
DEPARTMENT OF THE ARMY
DOD-314

Commander
US Army Communications and
Electronics Materiel Readiness Command
ATTN: DRSEL-ME-MQ
Fort Monmouth, New Jersey 07703

FOLD BACK

TEAR ALONG DOTTED LINE

REVERSE OF DA FORM 2028-2

By Order of the Secretary of the Army:

E. C. MEYER
General, United States Army
Chief of Staff

Official:
J. C. PENNINGTON
Major General, United States Army
The Adjutant General

DISTRIBUTION:
To be distributed in accordance with DA Form 12-51, Organizational maintenance requirement for AN/TSC-26.

*US GOVERNMENT PRINTING OFFICE. 1979-603-028/1276

DEPARTMENT OF THE ARMY
US ARMY AG PUBLICATIONS CENTER
1655 WOODSON ROAD
ST LOUIS MISSOURI 63114

OFFICIAL BUSINESS
PENALTY FOR PRIVATE USE $300

POSTAGE AND FEES PAID
DEPARTMENT OF THE ARMY
DOD 314

END

7-25-83

DATE

DEPARTMENT OF THE ARMY

MICROFORM
TEST TARGET